Parts List			
Item	Qty	Assembly ID	Material
1	1	A1	----
2	1	A2	----
3	1	A3	----
4	1	A4	----
5	1	A5	----
6	1	A6	----
7	1	A7	----
8	1	A8	Steel

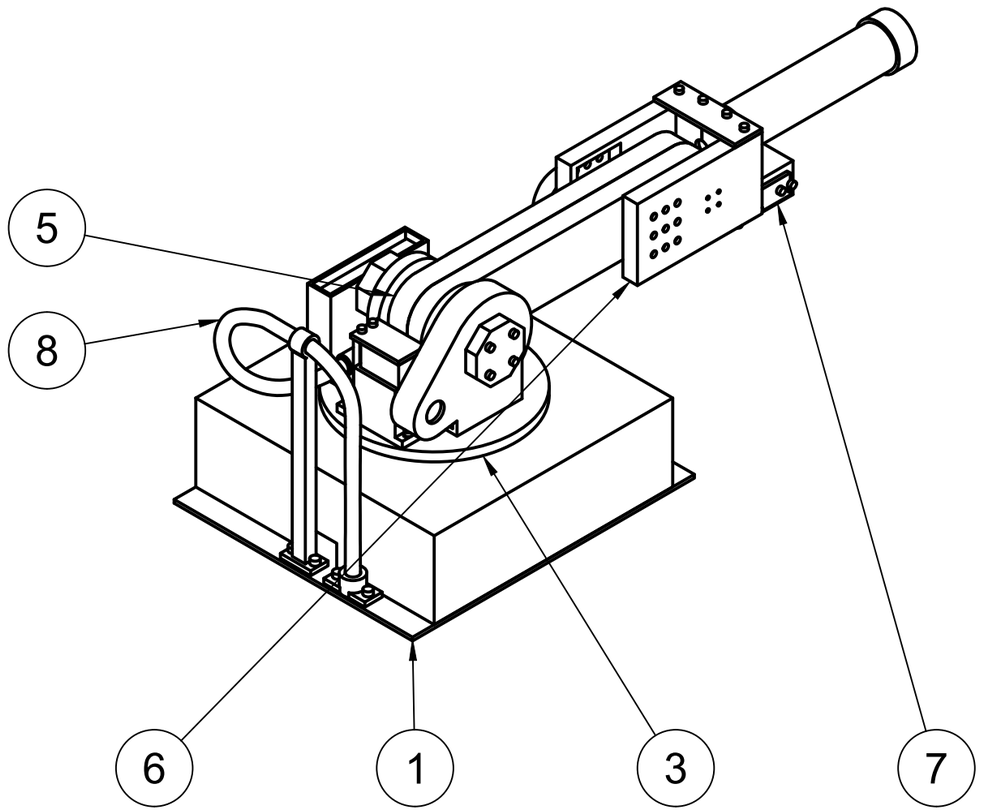

Dept.	Technical reference	Created by zakary miles	Approved by
		Document type	Document status
		Title DUM-E_bot	DWG No.
			Rev. / Sheet 1/18

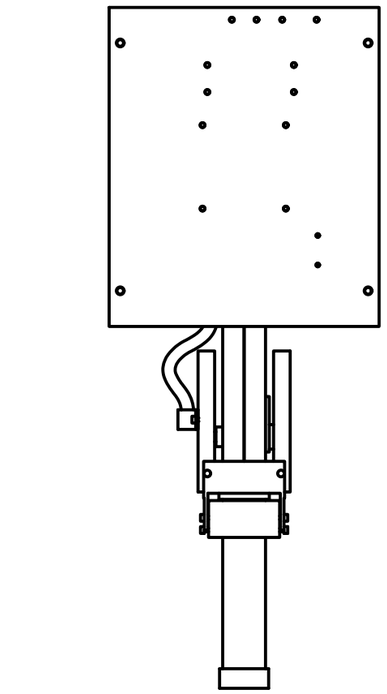

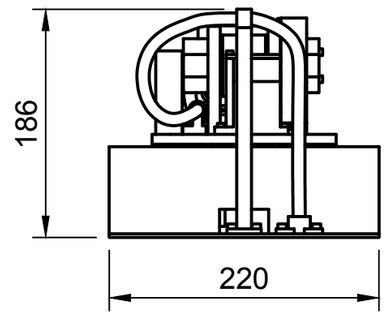

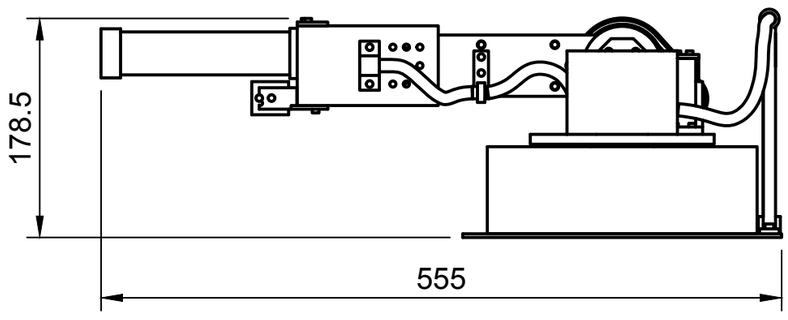

Dept.	Technical reference	Created by	Approved by
		zakary miles	
		Document type	Document status
		Title	DWG No.
		DUM-E_bot	
		Rev.	Sheet 2/18

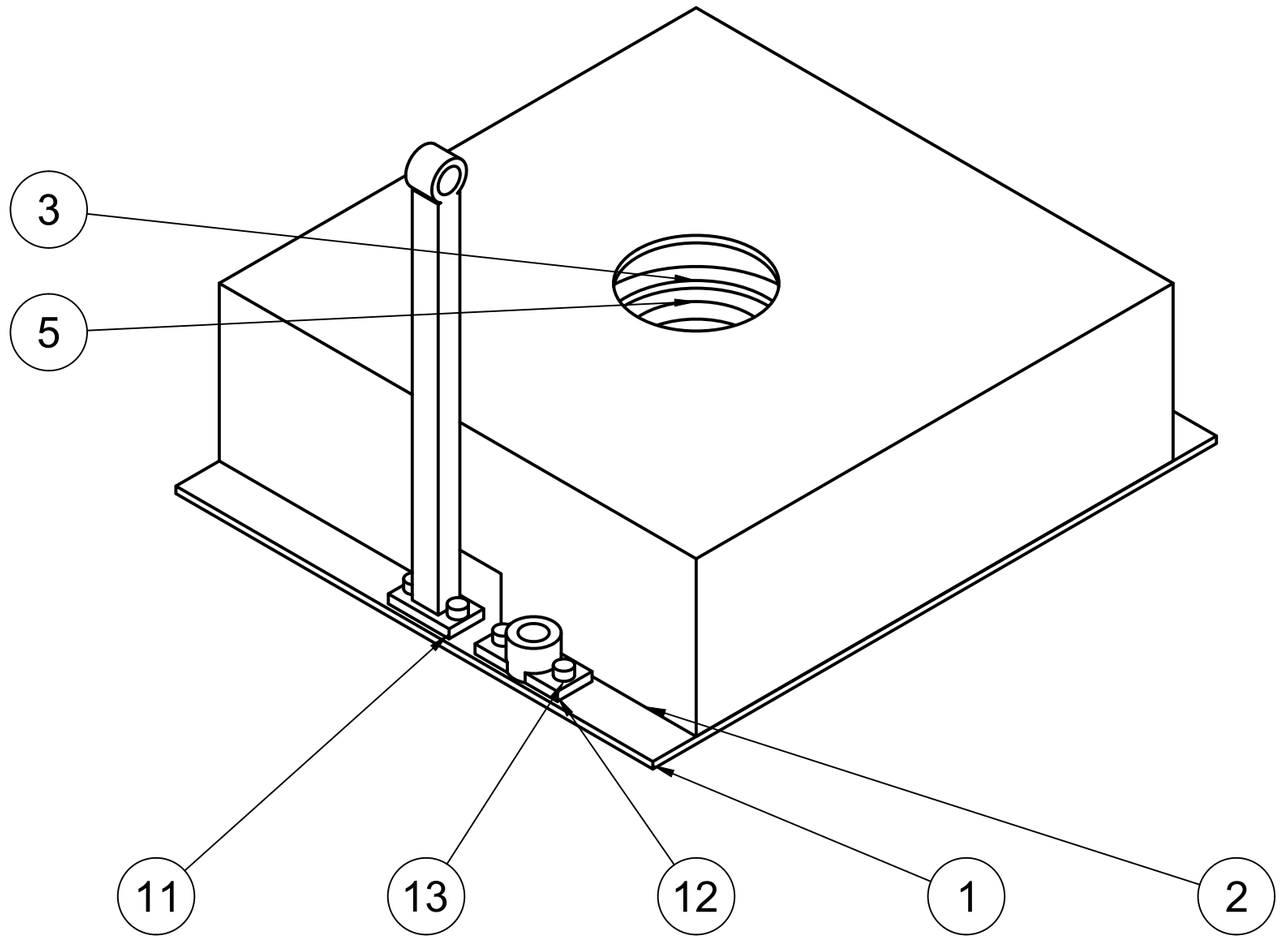

Parts List			
Item	Qty	Part Number	Material
1	1	DUME-H-001	Steel
2	1	DUME-P-001	PETG - assumed density
3	1	DUME-P-002	PETG - assumed density
4	1	DUME-H-002	Steel
5	1	DUME-H-003	Steel
6	1	DUME-P-003	PETG - assumed density
7	1	DUME-P-004	PETG - assumed density
8	1	DUME-E-001	Steel
9	1	DUME-P-005	PETG - assumed density
10	1	DUME-E-002	Steel
11	1	DUME-P-006	PETG - assumed density
12	1	DUME-P-007	PETG - assumed density
13	1	DUME-H-004	Steel

Dept.	Technical reference	Created by: zakary miles	Approved by
		Document type	Document status
		Title: DUM-E_bot	DWG No.
			Rev. / Sheet: 3/18

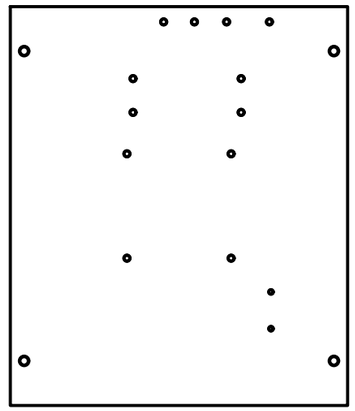

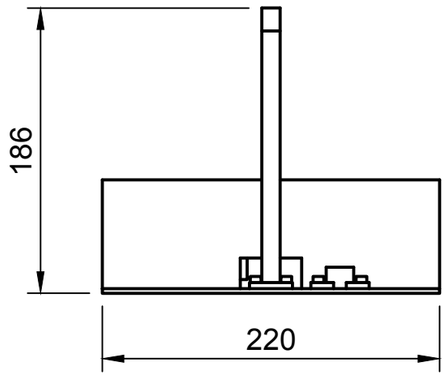

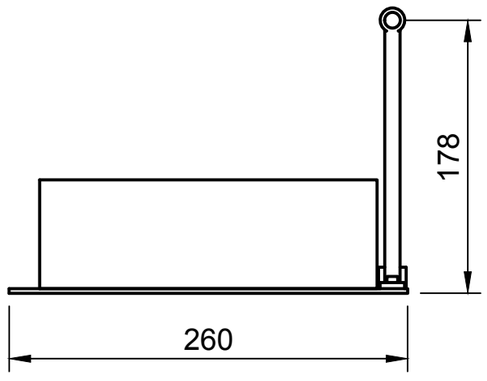

Dept.	Technical reference	Created by	Approved by
		zakary miles	
		Document type	Document status
		Title	DWG No.
		DUM-E_bot	
		Rev.	Sheet 4/18

Parts List			
Item	Qty	Part Number	Material
1	1	DUME-P-008	PETG - assumed density
2	1	DUME-E-003	Steel

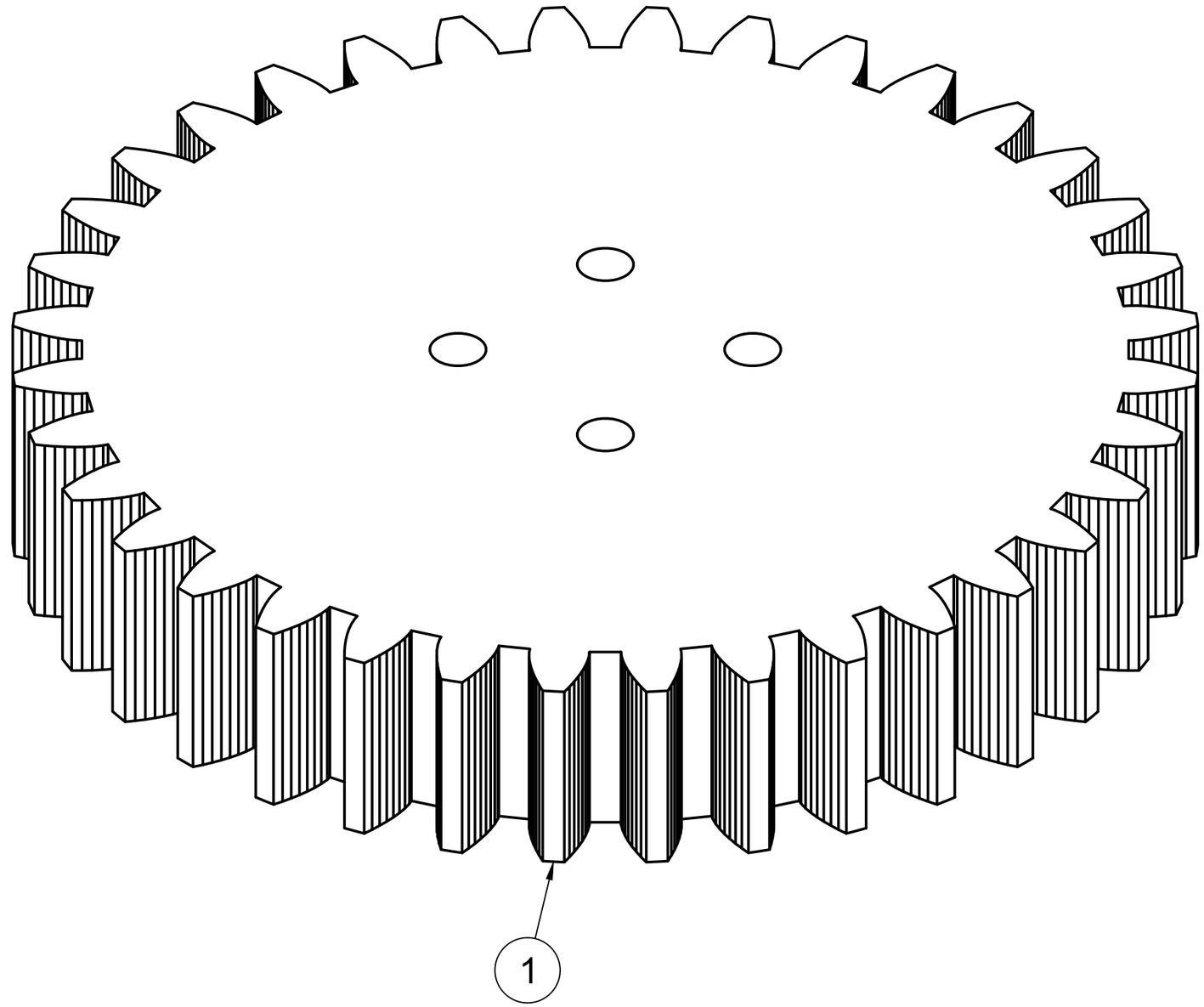

Dept.	Technical reference	Created by: zakary miles	Approved by
		Document type	Document status
		Title: DUM-E_bot	DWG No.
			Rev. / Sheet: 5/18

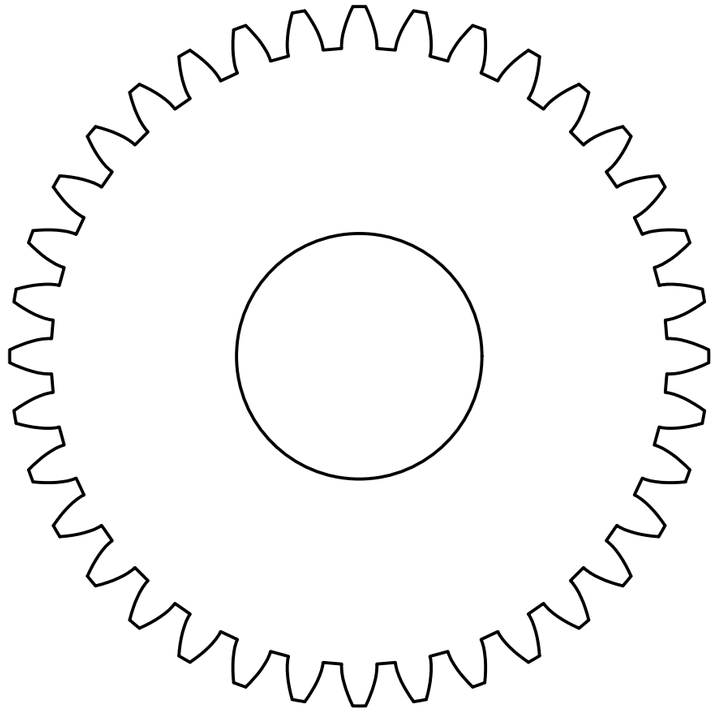

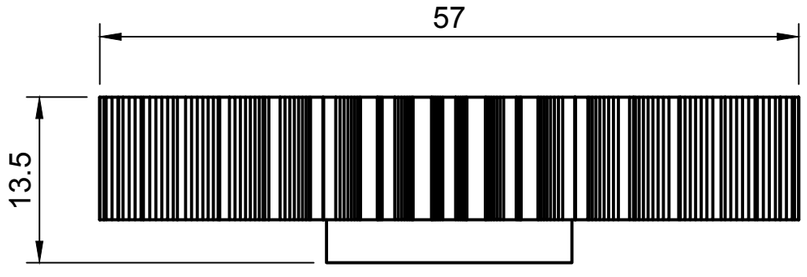

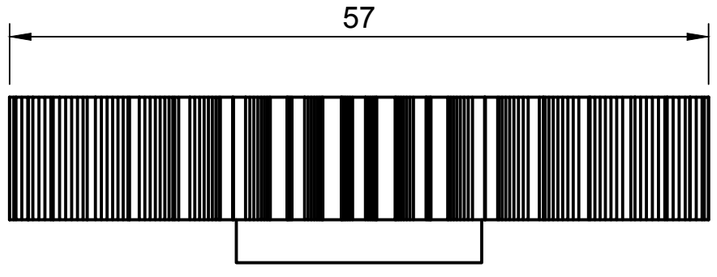

Dept.	Technical reference	Created by zakary miles	Approved by
		Document type	Document status
		Title DUM-E_bot	DWG No.
			Rev. / Sheet 6/18

Parts List			
Item	Qty	Part Number	Material
1	1	DUME-P-009	PETG - assumed density
2	1	DUME-P-010	PETG - assumed density
3	1	DUME-P-011	PETG - assumed density
4	1	DUME-P-012	PETG - assumed density
5	1	DUME-P-013	PETG - assumed density
6	1	DUME-P-014	PETG - assumed density
7	1	DUME-P-015	PETG - assumed density
8	1	DUME-P-016	PETG - assumed density
9	1	DUME-H-005	Steel
10	1	DUME-H-006	Steel
11	1	DUME-P-017	PETG - assumed density
12	1	DUME-P-018	PETG - assumed density
13	1	DUME-E-004	Steel
14	1	DUME-H-007	Steel
15	1	DUME-P-019	PETG - assumed density
16	1	DUME-P-020	PETG - assumed density
17	1	DUME-P-021	PETG - assumed density
18	1	DUME-P-022	PETG - assumed density
19	1	DUME-E-005	Steel
20	1	DUME-P-023	PETG - assumed density
21	1	DUME-H-008	Steel

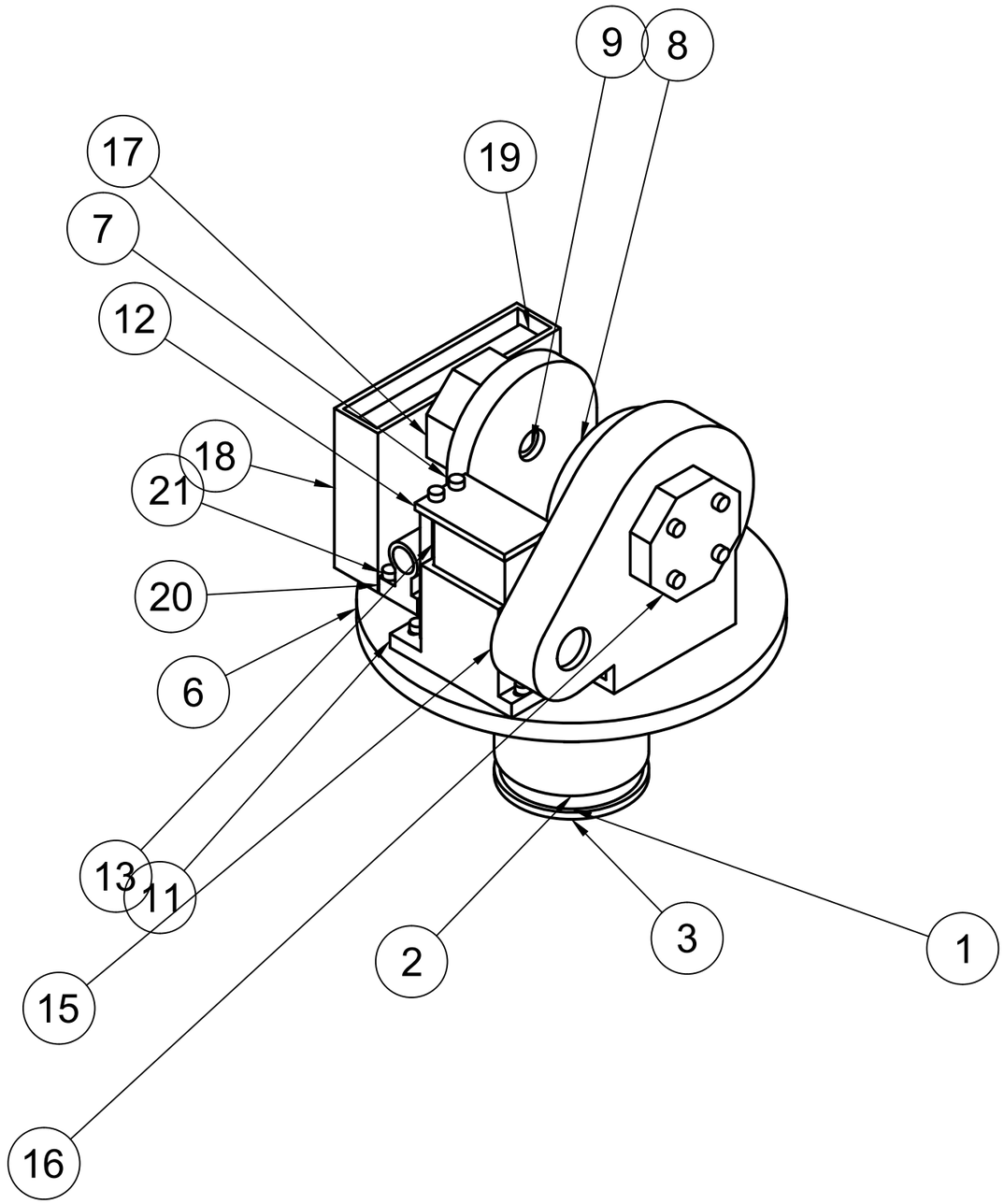

Dept.	Technical reference	Created by zakary miles	Approved by
		Document type	Document status
		Title DUM-E_bot	DWG No.
			Rev. / Sheet 7/18

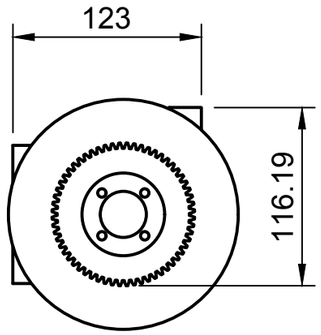

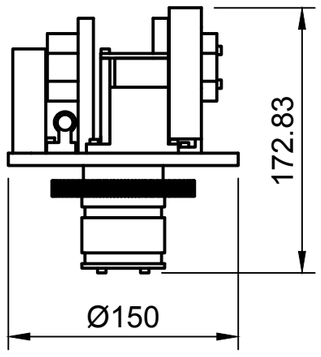

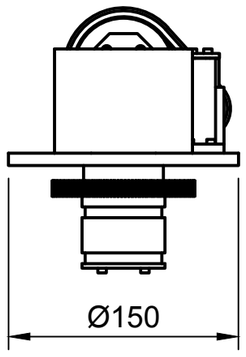

Dept.	Technical reference	Created by	Approved by
		zakary miles	
		Document type	Document status
		Title	DWG No.
		DUM-E_bot	
			Rev. / Sheet 8/18

Parts List			
Item	Qty	Part Number	Material
1	1	DUME-P-024	PETG - assumed density
2	1	DUME-E-006	Steel

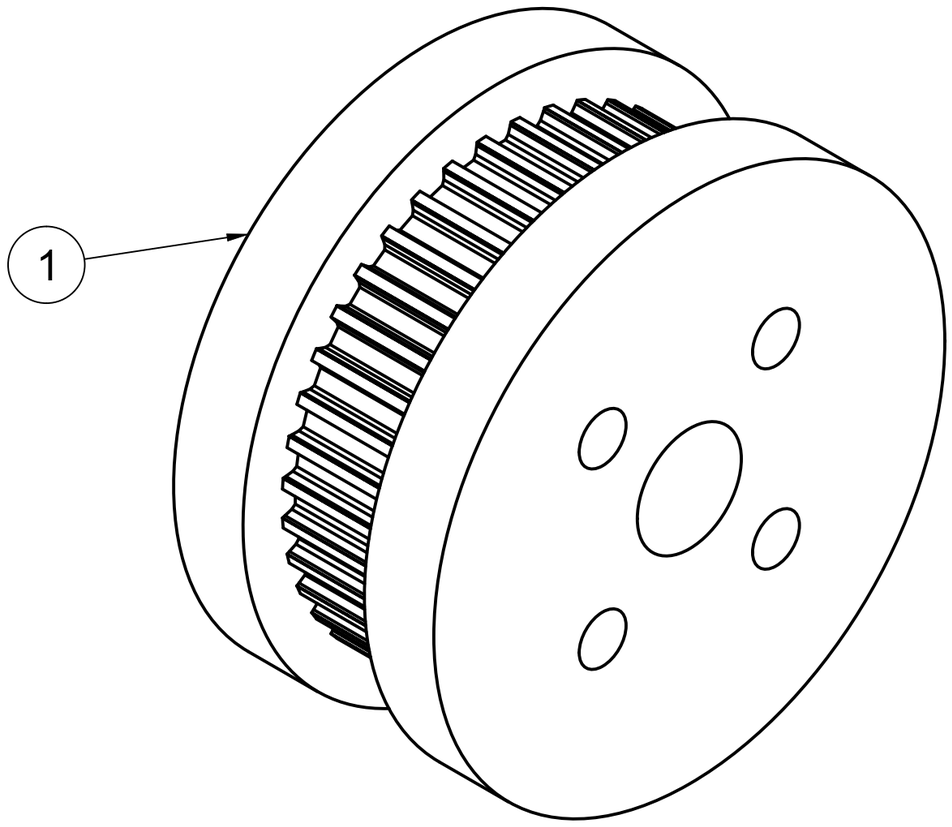

Dept.	Technical reference	Created by: zakary miles	Approved by
		Document type	Document status
		Title: DUM-E_bot	DWG No.
			Rev. / Sheet: 9/18

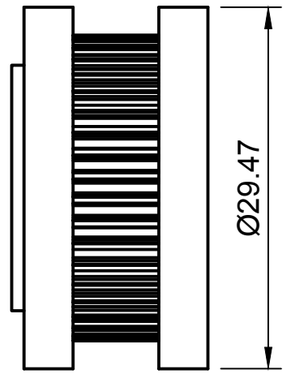

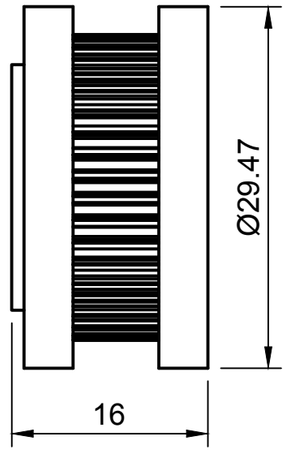

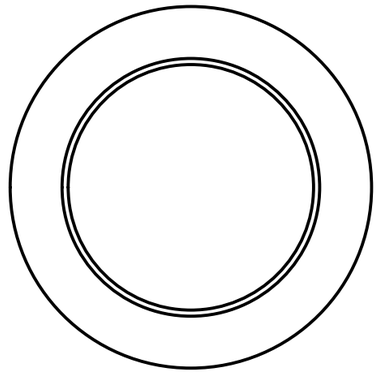

Dept.	Technical reference	Created by: zakary miles	Approved by
		Document type	Document status
		Title: DUM-E_bot	DWG No.
			Rev. / Sheet: 10/18

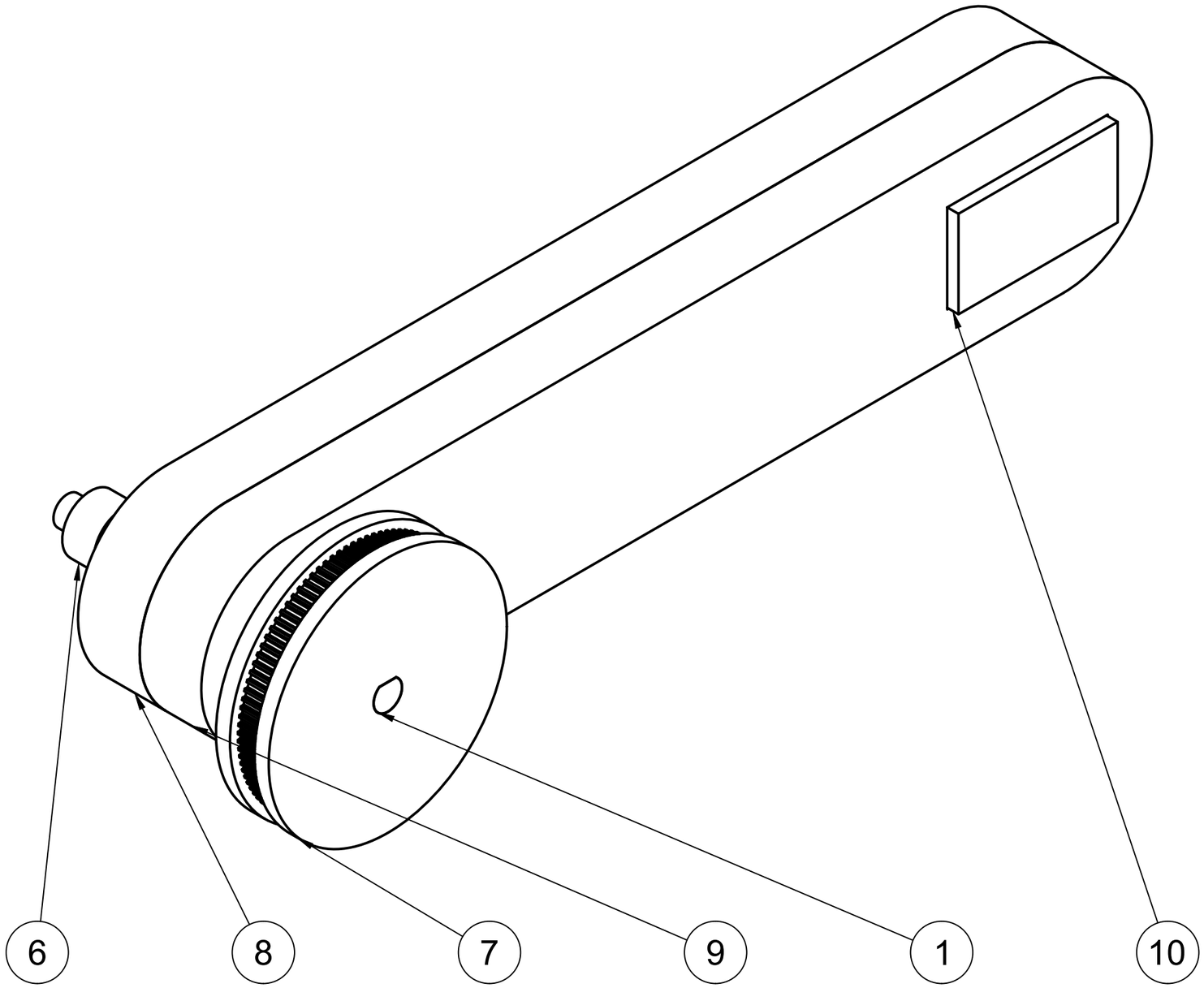

Parts List			
Item	Qty	Part Number	Material
1	1	DUME-H-009	Steel
2	1	DUME-P-025	PETG - assumed density
3	1	DUME-P-026	PETG - assumed density
4	1	DUME-H-010	Steel
5	1	DUME-P-027	PETG - assumed density
6	1	DUME-H-011	Steel
7	1	DUME-P-028	PETG - assumed density
8	1	DUME-P-029	PETG - assumed density
9	1	DUME-P-030	PETG - assumed density
10	1	DUME-E-007	Steel
11	1	DUME-H-012	Steel
12	1	DUME-P-031	PETG - assumed density
13	1	DUME-H-013	Steel
14	1	DUME-H-014	Steel

Dept.	Technical reference	Created by: zakary miles	Approved by
		Document type	Document status
		Title: DUM-E_bot	DWG No.
			Rev. / Sheet: 11/18

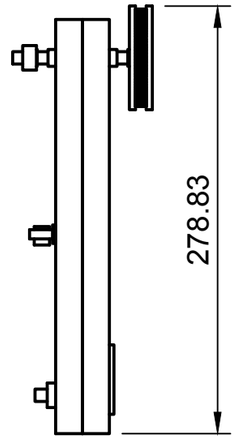

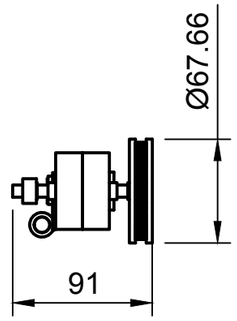

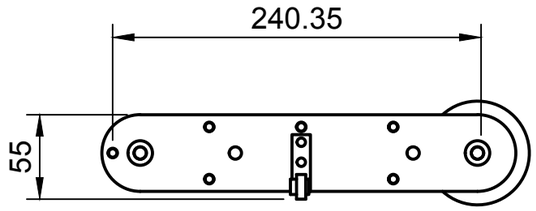

Dept.	Technical reference	Created by	Approved by
		zakary miles	
		Document type	Document status
		Title	DWG No.
		DUM-E_bot	
		Rev.	Sheet 12/18

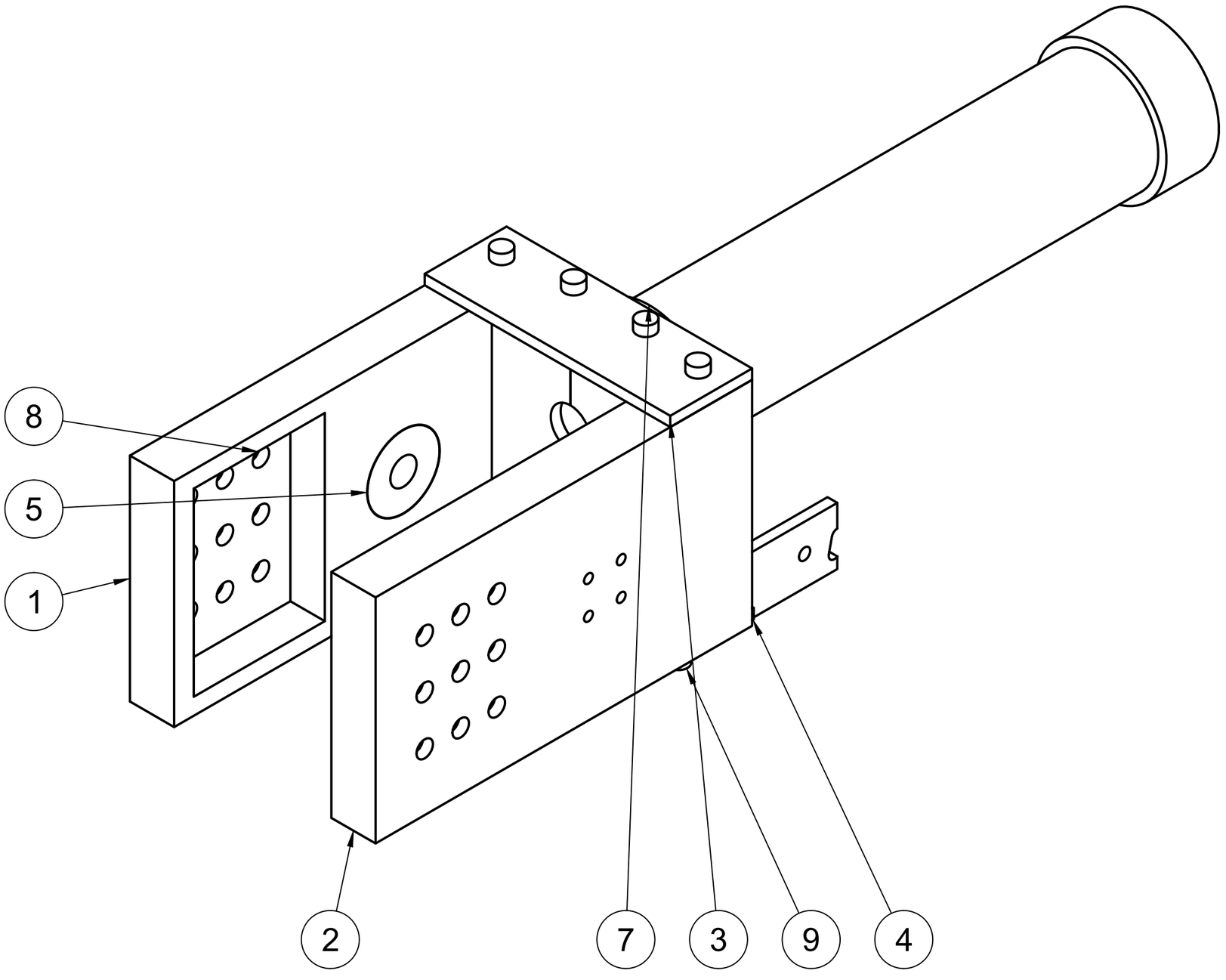

Parts List			
Item	Qty	Part Number	Material
1	1	DUME-P-032	PETG - assumed density
2	1	DUME-P-033	PETG - assumed density
3	1	DUME-P-034	PETG - assumed density
4	1	DUME-P-035	PETG - assumed density
5	1	DUME-H-015	Steel
6	1	DUME-E-008	Steel
7	1	DUME-P-036	PETG - assumed density
8	1	DUME-P-037	PETG - assumed density
9	1	DUME-H-016	Steel

Dept.	Technical reference	Created by: zakary miles	Approved by
		Document type	Document status
		Title: DUM-E_bot	DWG No.
			Rev. / Sheet: 13/18

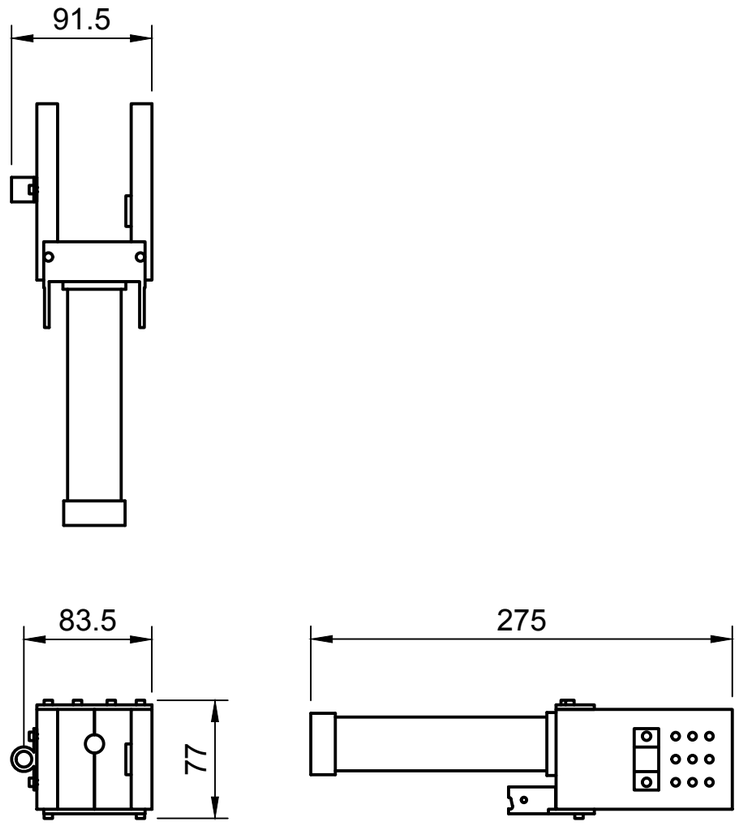

Dept.	Technical reference	Created by	Approved by
		zakary miles	
		Document type	Document status
		Title	DWG No.
		DUM-E_bot	
		Rev.	Sheet 14/18

Parts List			
Item	Qty	Part Number	Material
1	1	DUME-P-038	PETG - assumed density
2	1	DUME-E-009	Steel
3	1	DUME-E-010	Steel
4	1	DUME-H-017	Steel

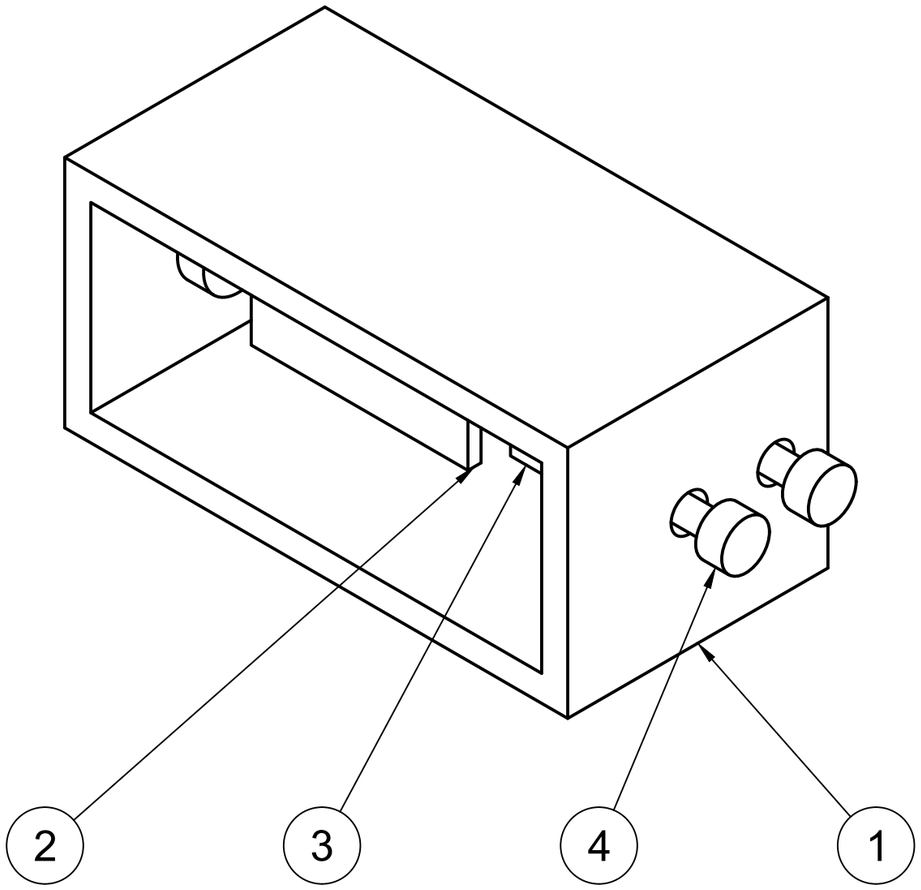

Dept.	Technical reference	Created by zakary miles	Approved by
		Document type	Document status
		Title DUM-E_bot	DWG No.
			Rev. / Sheet 15/18

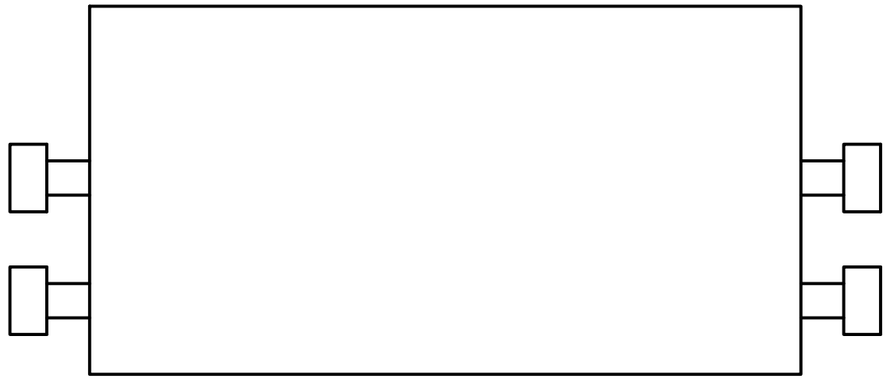

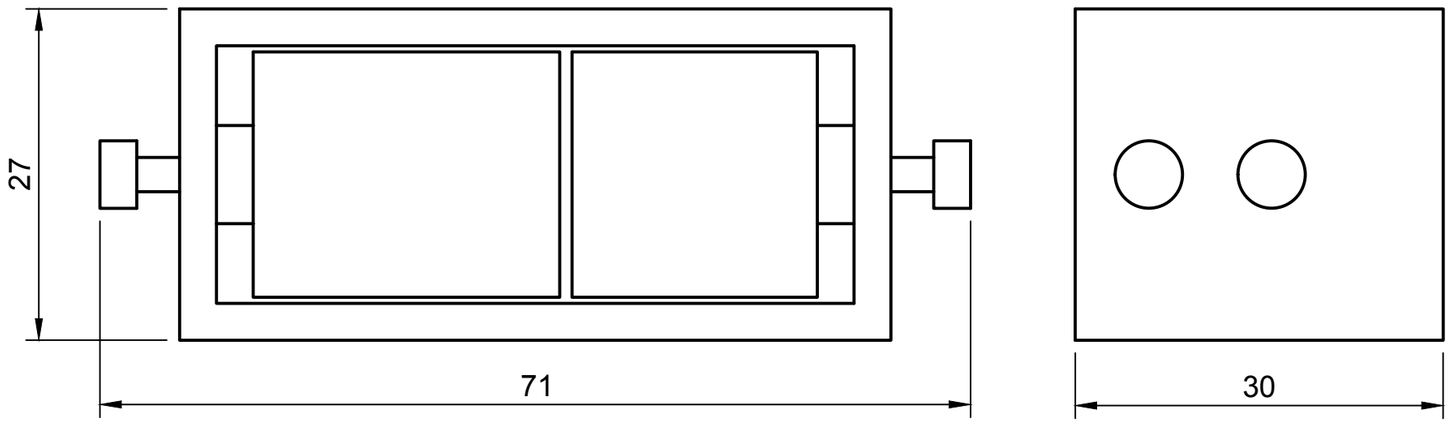

Dept.	Technical reference	Created by	Approved by
		zakary miles	
		Document type	Document status
		Title	DWG No.
		DUM-E_bot	
		Rev.	Sheet
			16/18

Parts List			
Item	Qty	Part Number	Material
1	1	DUME-H-018	Steel
2	1	DUME-H-019	Steel
3	1	DUME-H-020	Steel

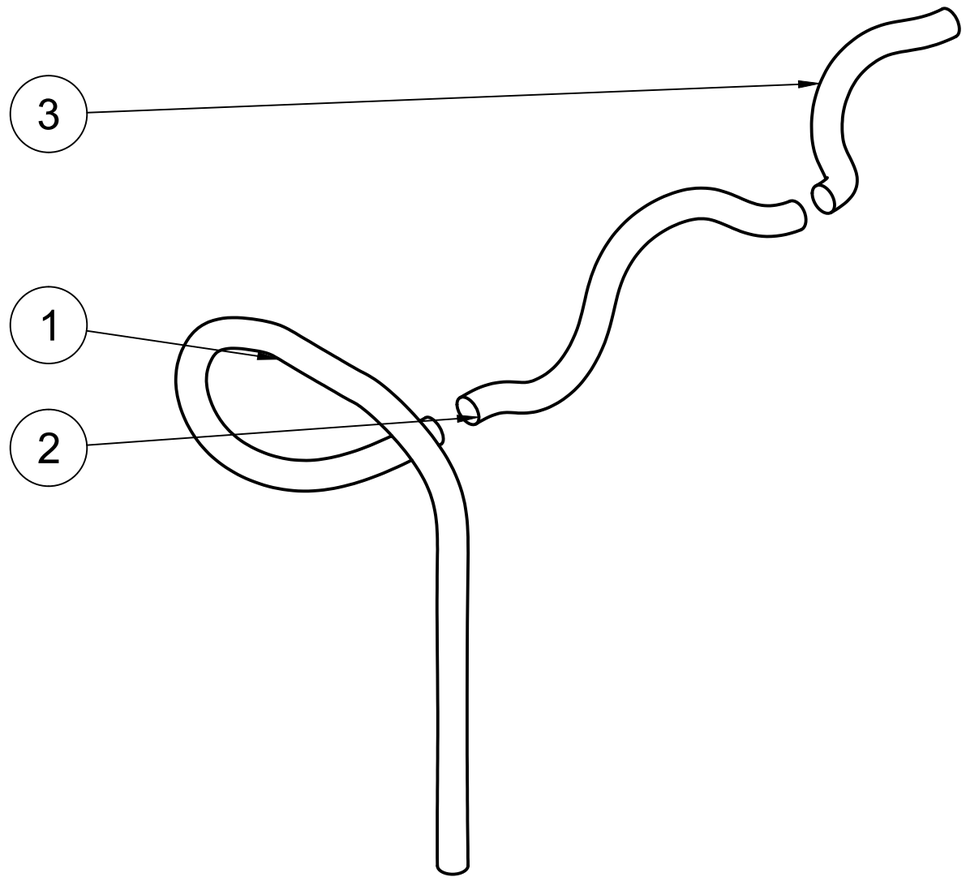

Dept.	Technical reference	Created by: zakary miles	Approved by
		Document type	Document status
		Title: DUM-E_bot	DWG No.
			Rev. / Sheet: 17/18

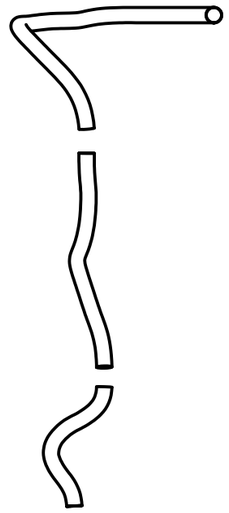

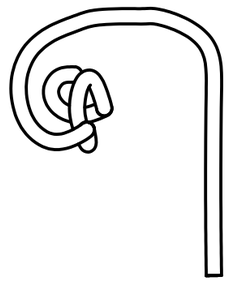

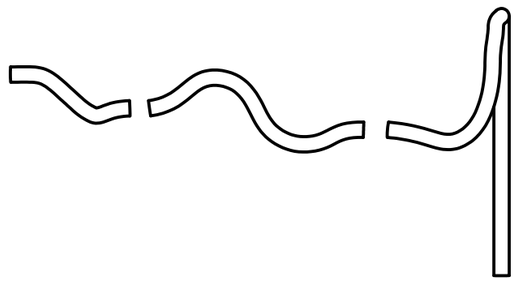

Dept.	Technical reference	Created by	Approved by
		zakary miles	
		Document type	Document status
		Title	DWG No.
		DUM-E_bot	
		Rev.	Sheet
			18/18