DUM-E

Inside a three-axis desk robot

How can a desk-mounted arm reach 425 mm while keeping its head clear of the work surface?

The design takes its silhouette from the workshop arm in *Iron Man*. A geared turntable aims the arm, a belt lifts its weight, and a servo tilts the sensor head. The design challenge was fitting those drives and their wiring inside split housings while keeping the head clear of the desk.

> **Project status**
> The saved Fusion v7 assembly passed 142 checks. Three checks require physical hardware. This report covers the digital prototype and the proposed build.

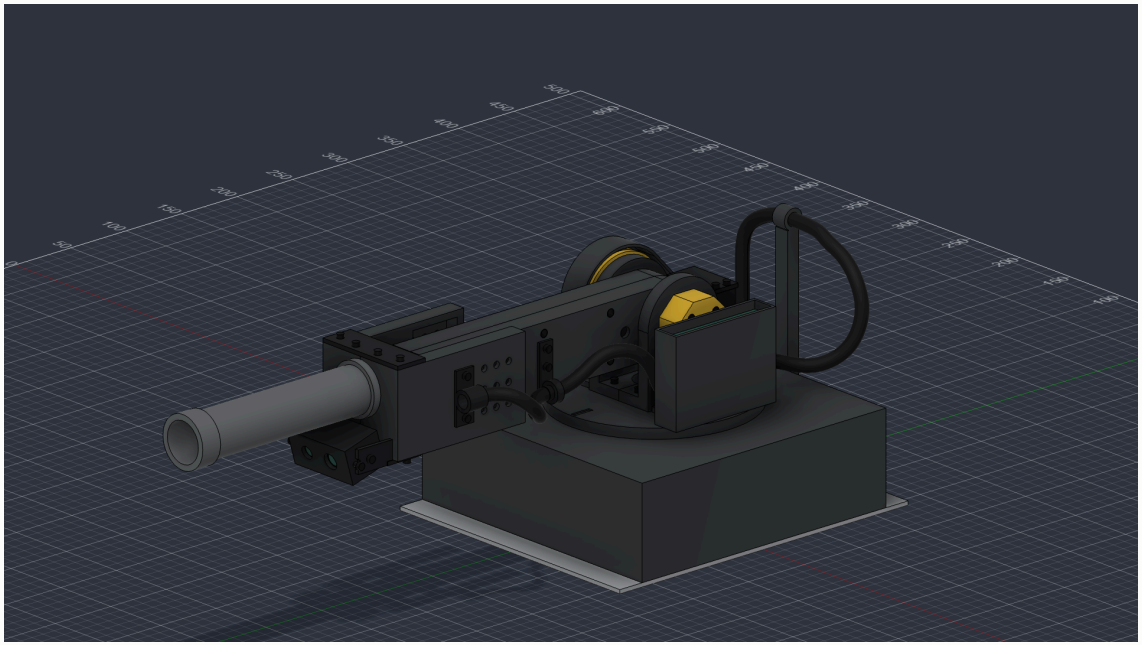

Parked assembly, seen from the sensor side. Autodesk Fusion v7.

68
modeled components

38
planned PETG prints

425 mm
level reach from yaw axis

Design targets and how to check them

The requirements fix the robot's working envelope and establish what evidence would support a physical build.

REQUIREMENT	DESIGN TARGET	EVIDENCE AND NEXT CHECK
Desk installation	220 × 260 mm plate with positive anchorage	CAD defines the footprint. Clamp geometry and desk capacity require measurement.
Motion and reach	±90° yaw, 0–120° shoulder, –30° to +60° tilt	Fusion checks joint limits and linked motion. Use independent angle measurements to establish physical repeatability.
Clearance	At least 5 mm between the moving assembly and desk	Compare the lowest sampled geometry with the requirement. Repeat a supported hand sweep with actual wiring and hose.
Shoulder capacity	At least 1.5× rated-torque margin in the sizing study	Calculated margin depends on print mass and servo rating. Weigh the moving parts and repeat the load calculation.
Board access	Fit the UNO, Pi and two head sensors with serviceable connections	CAD reserves component volume. Trial-fit connectors, board retention and flex routing before an integrated build.

Design records

Dimensions are in millimetres. Fusion v7 supplies the native motion and material results. The photographs show the saved Fusion v7 model. Dimensions are nominal design values. The wiring architecture is a proposed bench design.

How the assembly fits together

Follow the load from the head through the shoulder shaft, into the yaw bearings, and down to the steel base plate.

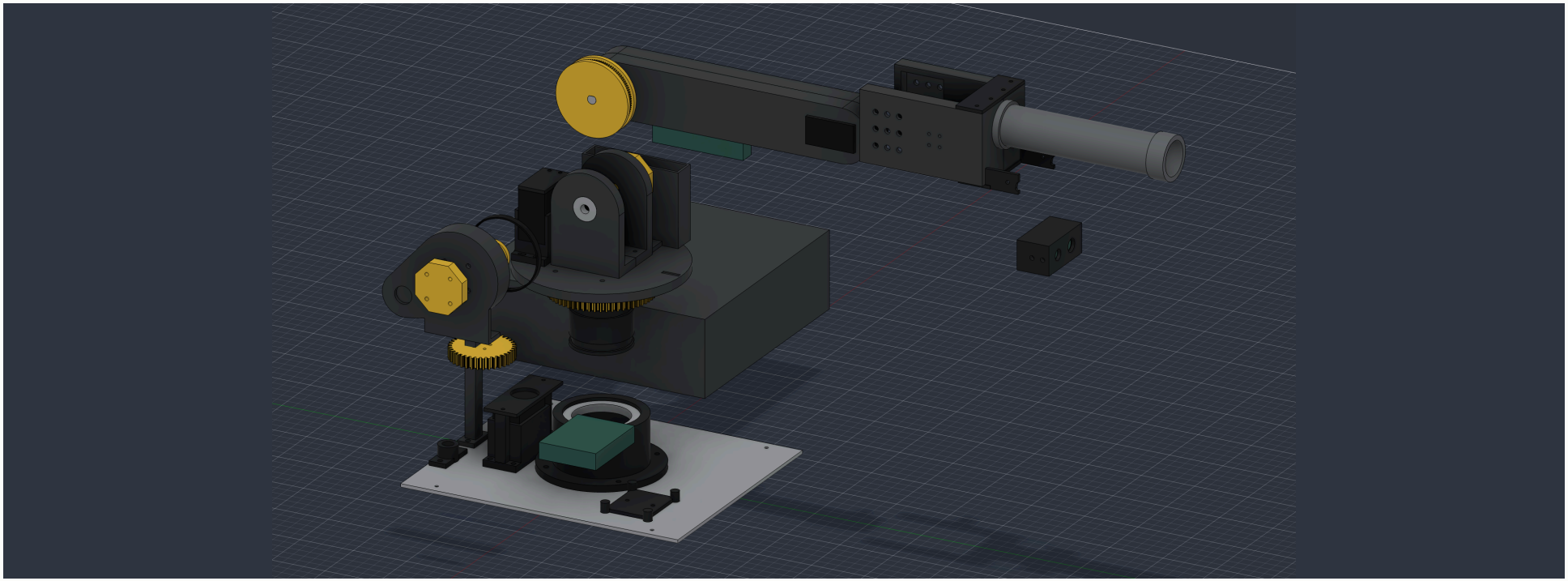

Exploded assembly from Fusion v7. From the base plate upward, the separated parts show the yaw drive, shoulder supports and arm. The sensor pod sits below the head. The view omits grouped fasteners and the flexible hose.

Access sets the assembly order

The lower yaw bearing and retainer go together while the underside is accessible. The base cover fits over the hub before the larger turntable is attached.

The head closes around the shroud

The two head halves capture the barrel root and retaining band. The sensor pod mounts underneath on a manually adjustable pivot.

Key dimensions in the model

The side view locates the two arm pivots. The table gives nominal design dimensions. Open the native Fusion drawing set for the assembly projections and part-number balloons.

FEATURE	NOMINAL DIMENSION	REFERENCE
Base plate	220 × 260 × 3 mm	The steel plate sits on the desk.
Printed cover	220 × 220 × 71 mm	The cover encloses the stationary drive and controller.
Shoulder axis	140 mm	Height above the desk at the modeled mounting plane.
Level reach	425 mm	Yaw axis to the shroud tip in the parked pose.

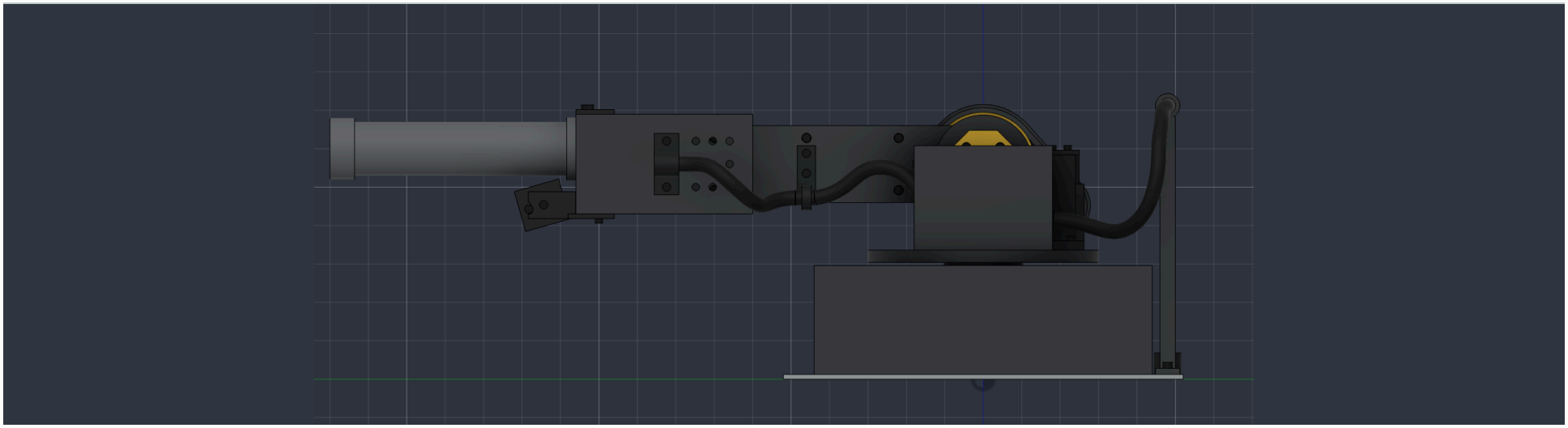

Left side, parked. The shoulder supports the arm above the base cover.

DRIVETRAIN

Three axes, three drive choices

The yaw bearings carry the turntable. The gear pair sets its angle. At the shoulder, belt reduction gives the servo more leverage over the long arm.

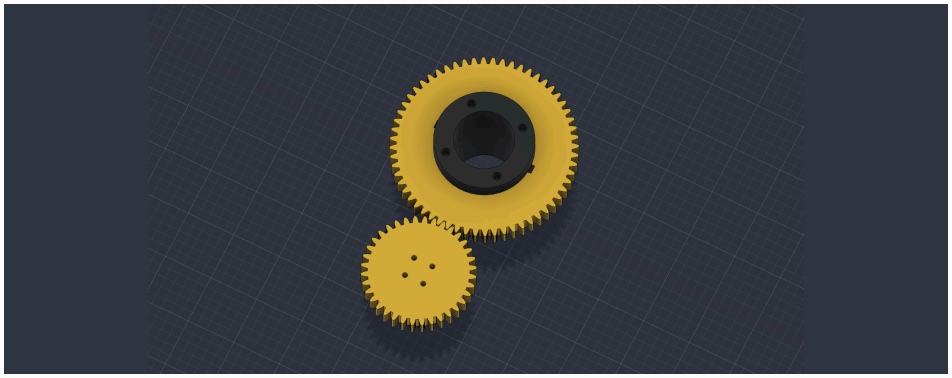

Base yaw. The 36-tooth pinion drives the 60-tooth gear. Their 72 mm center distance sets the servo position.

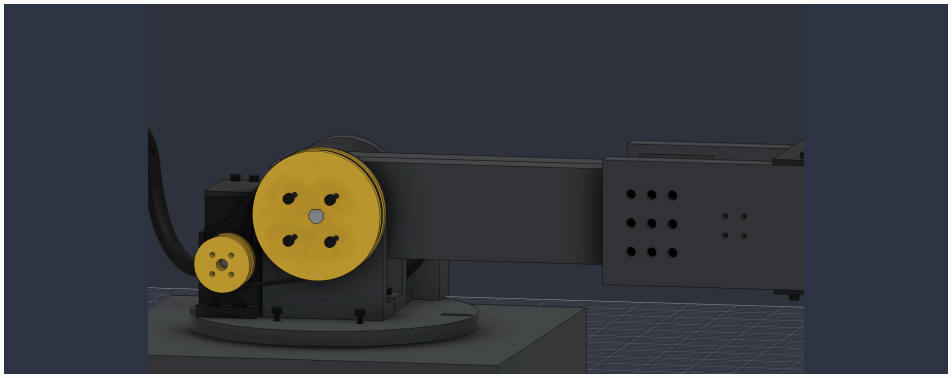

Shoulder pitch. The exposed 40-tooth and 100-tooth pulleys give the shoulder a 2.5:1 reduction.

JOINT	DRIVE AND SUPPORT	MODELED TRAVEL
Base yaw	1.67:1 external gear reduction · two 61810 bearings	–90° to +90°
Shoulder pitch	2.5:1 belt reduction · two 608 bearings	0° to +120°
Head tilt	Direct servo drive · pivot pin and one 608 bearing	–30° to +60°

The sensor pod has a separate manual angle adjustment. The three servos drive the base, shoulder and head.

MECHANICAL ANALYSIS

Why the shoulder uses a belt reduction

Gravity loads the shoulder most heavily when the arm extends away from the base. The sizing study treats the moving parts as point masses and includes allowances for friction, hose drag and acceleration.

Required motor torque

$$1.270\ \text{N·m} \div (2.5 \times 0.95)$$

$$\approx 0.535\ \text{N·m}$$

Nominal joint torque divided by pulley reduction and assumed transmission efficiency.

Conditional torque margin

$$0.981\ \text{N·m} \div 0.535\ \text{N·m}$$

$$\approx 1.83\times$$

Assumes the selected servo matches the candidate rated torque. Continuous duty still needs measurement.

EFFECTIVE MATERIAL VOLUME	CALCULATED SHOULDER MARGIN	AGAINST 1.5× TARGET
50%	2.26×	Above target
70% · nominal	1.83×	Above target
100% · solid	1.43×	Below target

Effective material volume describes the fraction of solid CAD volume occupied by plastic. Slicer infill, walls and top and bottom layers together determine the actual print mass.

KINEMATICS

Reading the joint motion

Three stills from the Fusion motion study show the return toward the parked position. The angles below are the commanded joint positions, rounded to the nearest degree.

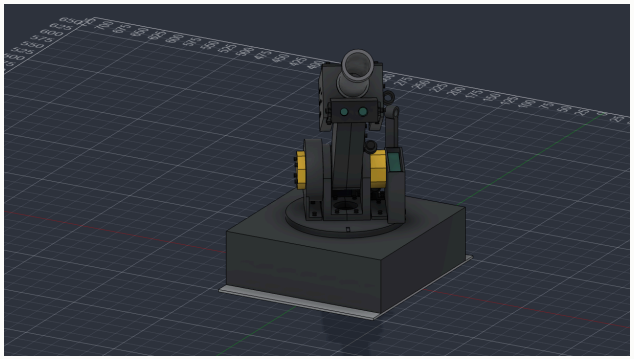

Returning from the scan
Yaw +31° · Shoulder +44° · Head –16°

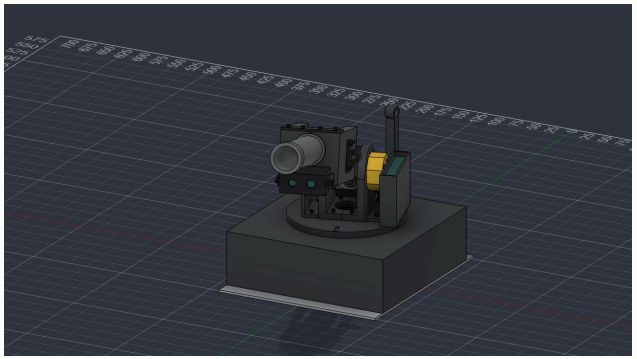

Approaching park
Yaw +17° · Shoulder +24° · Head –9°

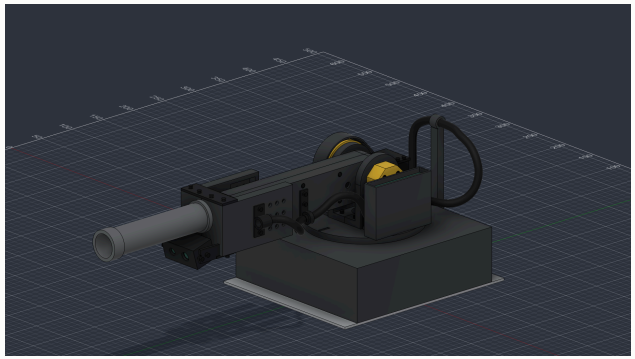

Parked
Yaw 0° · Shoulder 0° · Head 0°

What moves together

The turntable carries the shoulder and arm. Shoulder pitch carries the head pivot with it. Head tilt is measured relative to the arm, so its angle alone cannot tell you the barrel's angle to the desk.

What stays independent

The sensor pod is set manually to –16° throughout these three views. The moving frames hide the flexible hose. Its bending and drag need a physical mockup.

The Fusion joint sweep checked angular travel and return to the starting pose.

ELECTRONICS PACKAGING

Where the boards go

Teal solids reserve space for electronics in three locations. The fixed base carries the controller, the moving shoulder carries the computer, and the sensor pod faces forward below the head.

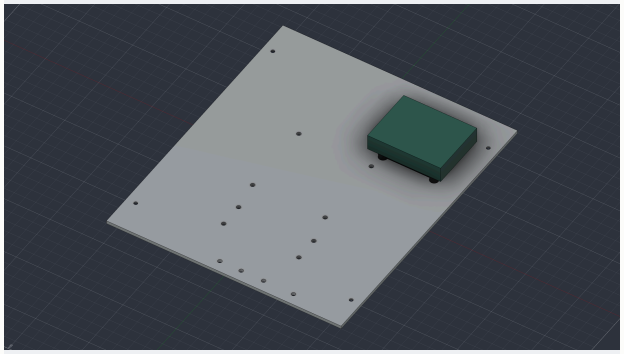

Arduino UNO R4 WiFi.

The stationary board supervises motion enable and limit inputs. Its mount needs PCB screw holes.

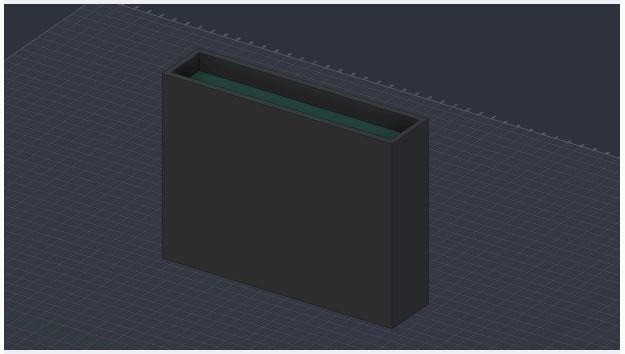

Raspberry Pi 5.

The upright bay carries the Pi beside the shoulder. Cable clearance and retention need a fit check.

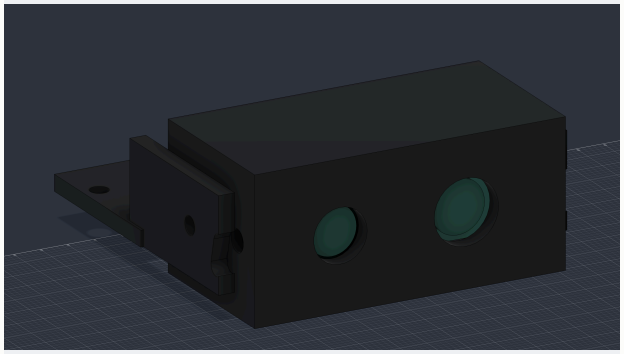

RGB and thermal sensors.

The two apertures face forward. Final carrier dimensions depend on the selected boards and connectors.

Why the motor supply changed

Three candidate servos at their listed stall current total **8.1 A**. The proposed bus adapter is rated for **5 A**. The electrical plan gives the Pi its own supply and routes motor current through separately protected branches. The adapter handles servo communication.

Board envelopes describe packaging. Detailed PCB layouts, installed wiring and connector clearances require the selected hardware.

ELECTRICAL ARCHITECTURE

Three paths through the robot

The Pi handles sensing and servo communication. A separate motor rail supplies the actuators, and the UNO supervises the contactor enable.

PATH	CONNECTIONS IN THE PROPOSED PROTOTYPE
Sensor data	Camera Module 3 over CSI and MLX90640 over I²C to Raspberry Pi 5.
Motion commands	Pi USB to the servo bus adapter, then the shared data bus to the three actuators.
Motor power	12 V supply through the main fuse and K1 contact to individually fused servo branches.
Enable and stop	A normally closed stop contact feeds the coil circuit. The UNO monitors limits and heartbeat and controls the coil driver.
Logic power	The Pi uses its own supply and exchanges supervisory data with the UNO over USB.

Command and feedback

The Pi also exchanges supervisory data with the UNO over USB. The adapter and servos share a signal reference. The Pi logs events from its own supply when motor power opens.

Stop behavior

The physical stop opens the coil feed. The UNO can independently remove the driver enable. The proposed lamp test checks both actions before motors are connected.

Bench architecture only. Connector pinouts, protection coordination and mechanical shoulder restraint require hardware verification.

ENGINEERING DECISIONS

Keeping the head above the desk

The 160 mm barrel sets the silhouette. Lowering the head at the bottom of the shoulder sweep exposed a collision that the arm’s neutral pose concealed.

Original lower tilt limit

−60°

At zero shoulder angle the rigid model extended **42.54 mm below** the desk.

Revised lower tilt limit

−30°

The same shoulder position gave **28.84 mm clearance** in the R1 geometry study.

What the saved Fusion assembly verified

The native v7 desk check made 63 component bounding-box measurements. Its lowest result was **28.39 mm**, above the 5 mm design target. The joint sweep returned to its starting pose, and the material check found PETG on all 38 printed bodies.

142	0	3
checks passed	checks failed	physical checks untested

What a prototype would have to establish

Belt tooth engagement and tension, drivetrain backlash and behavior under load, and flexible-hose clearance through travel remain open. Printed mass, joint play and cable drag can change the real clearance.

Sources include the R1 clearance study and the archived Fusion v7 validation run.

VERIFICATION RECORD

What passed, and under what conditions

A passing CAD result answers a specific geometric question. Each row gives the method, the observed result and the claim it supports.

CHECK AND METHOD	CRITERION	OBSERVED RESULT
Yaw link · Fusion v7	Opposite rotation at 60/36	−1.66667 pinion turns per output turn. Pass.
Shoulder link · Fusion v7	Same rotation at 100/40	2.50000 drive turns per output turn. Pass.
Return pose · Fusion v7	Maximum displacement ≤ 0.02 mm	0.00 mm after the combined sweep. Pass.
Desk sweep · Fusion v7	Minimum height ≥ 5 mm	28.393 mm in 63 bounding-box checks. Pass.
Rigid interference · FreeCAD R1	No overlap above 0.5 mm^3 at sampled poses	No reportable overlaps in 150 poses. A deliberately out-of-range shoulder pose yielded 12 overlaps.
Control logic · host simulation	Inhibit at boot and respond to stop, limit or lost heartbeat	Host tests passed the inhibit, trip and recovery cases. UNO R4 WiFi firmware compiled. Installed stop timing is open.

The native run totals 142 passed, 0 failed and 3 untested. The FreeCAD study and controls tests are separate evidence. The downloadable Fusion register lists every native check.

From brief to validated CAD

The project began with a silhouette and a motion envelope. Each design stage produced a record that a future builder can inspect.

Requirements and scope

Defined

Set the 220 × 260 mm base footprint, three powered axes, 425 mm level reach and 5 mm minimum desk-clearance target. Keep the pod adjustable by hand.

Deliverable Requirements register with target ranges, assumptions and acceptance criteria.

Mechanical architecture

Modeled

Split the assembly into base, pinion, turntable and shoulder, shoulder drive, arm, head, sensor pod and flexible hose. Specify purchased bearings, shafts and fasteners alongside the 38 prints.

Deliverable Revision-controlled CAD, dimensioned drawings, component register, mechanical BOM and 73-location screw schedule.

Loads, packaging and controls

Analyzed and specified

Estimate moving mass and shoulder torque across print-fill scenarios. Reserve space for boards and wire passages, define the power split and plan the supervisory control logic.

Finding Estimated shoulder torque margin falls from 1.83 at nominal fill to 1.43 for solid prints, against a 1.5 design target. Actual print mass matters.

Verification and documentation

CAD run complete

Check component inventory, material assignments, joint limits, drive ratios, desk clearance and return pose on the saved native model. Record results by revision.

Deliverable Fusion v7 run with 142 passes, zero failures and three physical checks outstanding. The assembly views and drive details document the design.

From CAD to a bench prototype

These stages describe a proposed inert build. Each stage has an observable result before the next commitment.

Qualify interfaces

Planned

Measure actual boards, horns, bearings, hose, printer bed and desk clamp. Print the 608, 61810 and M3 insert coupons. Trial-fit the board carriers, shaft and pulley retention.

Proceed when Fits are recorded, the drive retains its parts, and board and connector access works with the selected hardware.

Fabricate and assemble

Planned after fit trials

Update dimensions and the BOM from the trials. Print and weigh the parts. Assemble the yaw stack, shoulder drive, arm and head in access order. Route an inert hose and wiring with the base anchored.

Proceed when The supported assembly moves by hand through its limits with usable slack, secure retention and measured desk clearance.

Commission one axis at a time

Planned

Bench-check sensing, motor isolation and the independent stop. Use a supported fixture to check each axis for belt tracking, play, current, heating and position repeatability.

Proceed when Measured results meet the acceptance criteria, including controlled shoulder behavior on power loss.

Integrate and document

Planned

Run slow coordinated motions on an anchored inert prototype. Measure clearance, routing, loads and repeatability. Record discrepancies, revise the CAD and repeat affected checks.

Final record As-built BOM, measured results, photographs and a revised risk register. Any functional suppression system is a separate qualified integration project.

What would qualify the first prototype

Record the hardware revision, setup, measurement and disposition for each test. The three untested Fusion items are assigned to bench checks here.

OPEN ITEM	TEST SETUP	ACCEPTANCE EVIDENCE
Belt engagement and tension	Supported shoulder fixture with the selected belt, pulleys and servo horn. Sweep the permitted travel by hand.	Record the vendor tension criterion, measured setting, tracking and tooth engagement. Resolve slipping or binding.
Backlash and drive loads	Supported axis with an independent angle reference. Repeat the return move ten times and log current and temperature.	Compare return error against the provisional ±1° target. Establish measured load and thermal limits before coordinated operation.
Flexible hose clearance	Fit the inert loop and wiring on the anchored assembly. Sweep combined poses, including the low shoulder and head limits.	Record the worst desk clearance against 5 mm, slack at endpoints, bend radius and any pinch or drag.
Stop and power loss	Use a lamp first. After bench qualification, repeat on an independently supported axis.	Record lamp extinction, restart inhibition, stop time and shoulder drop. Set the allowable drop from fixture clearance before testing.

Disposition

Each open fit or test finding goes back to the relevant CAD feature, BOM line or control setting. Repeat the affected checks on the revised model and keep the measured record with the build.

Base and shoulder

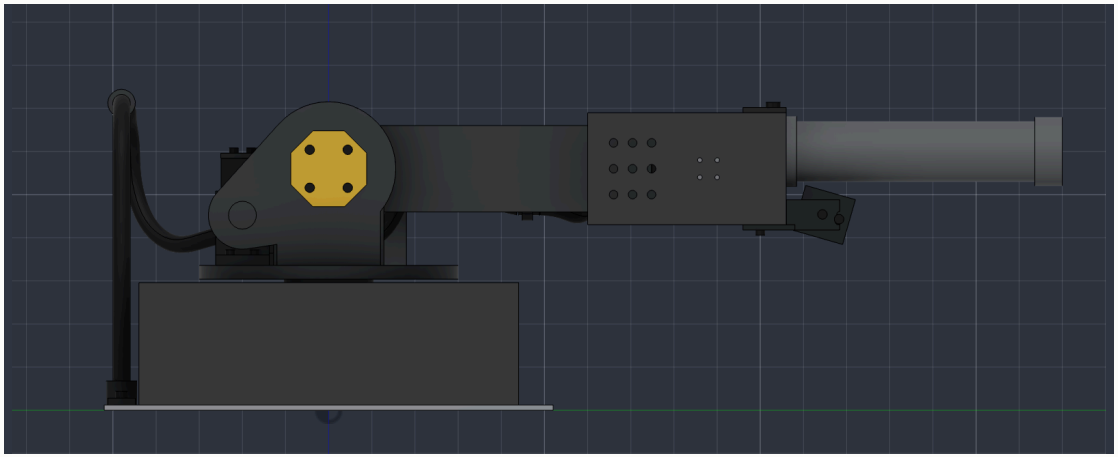

Right side, parked. The shoulder axis lies at the center of the yellow cap.

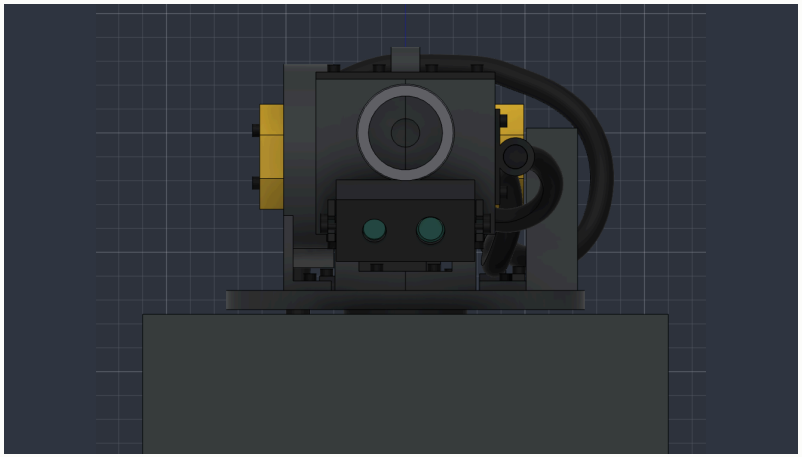

Front detail. The sensor pod sits below the shroud and above the base.

FEATURE	NOMINAL DIMENSION	REFERENCE
Base plate	220 × 260 × 3 mm	The steel plate sits on the desk.
Printed cover	220 × 220 × 71 mm	The cover encloses the stationary drive and controller.
Shoulder axis	140 mm	Height above the desk at the modeled mounting plane.
Level reach	425 mm	Yaw axis to the shroud tip in the parked pose.

Yaw gears and shoulder belt

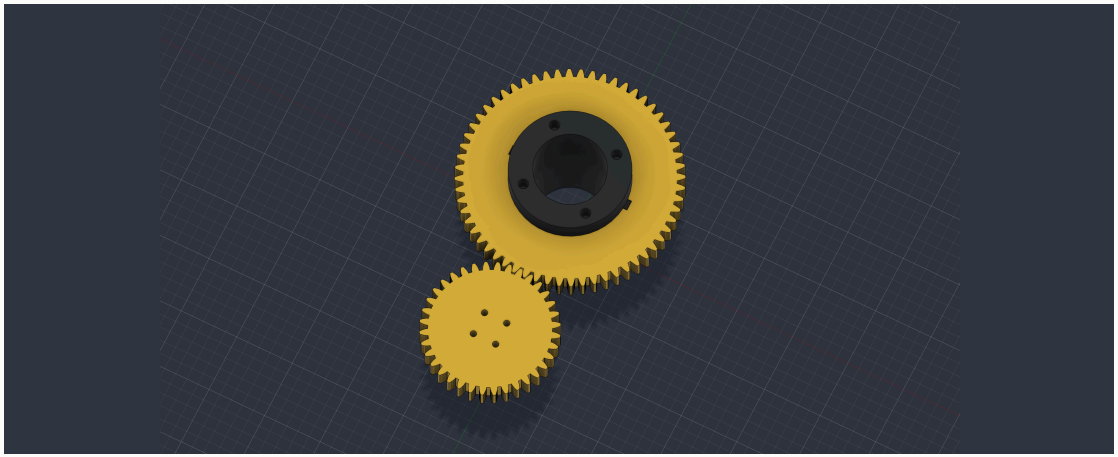

Isolated yaw gear pair. The small pinion meshes with the larger gear on the hub.

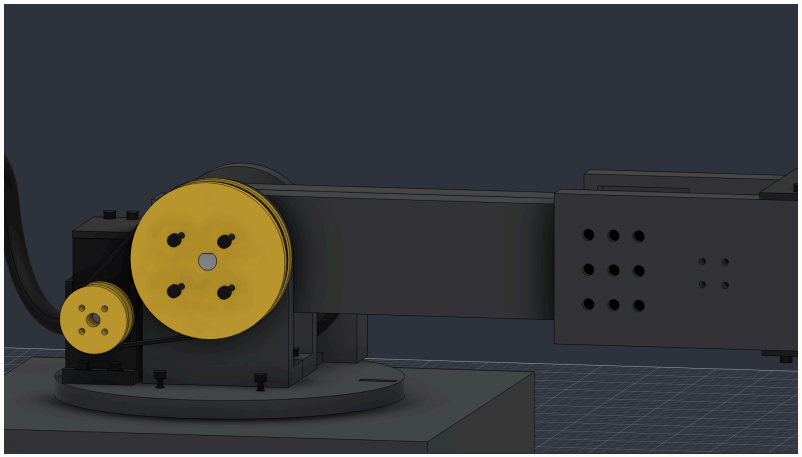

Shoulder drive with the guard hidden. The small pulley drives the large pulley on the arm shaft.

FEATURE	NOMINAL DIMENSION	REFERENCE
Yaw pitch diameters	54 mm / 90 mm	36-tooth pinion and 60-tooth ring gear, module 1.5, 20° pressure angle.
Yaw shaft spacing	72 mm	Center distance of the external gear pair.
Pulley pitch diameters	25.465 mm / 63.662 mm	40-tooth and 100-tooth pulleys.
Shoulder belt	260 × 6 mm	130 teeth at 2 mm pitch. Nominal centers are 56.79 mm apart. The cradle allows ±2 mm of tension adjustment.

Arm, head and sensor pod

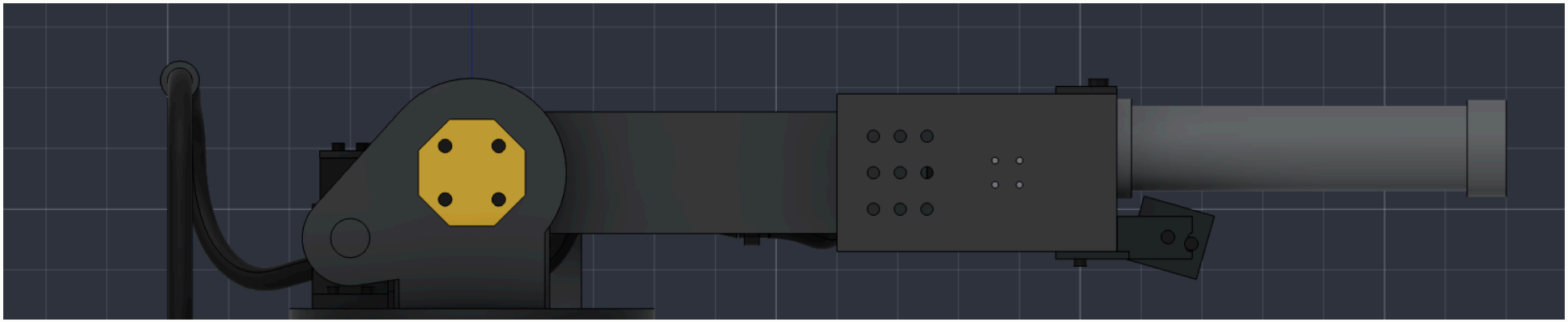

Right-side detail. The sensor pod sits below the head and the shroud projects forward.

FEATURE	NOMINAL DIMENSION	REFERENCE
Arm pivot spacing	220 mm	Shoulder axis to head-tilt axis.
Head housing	115 × 75 × 65 mm	Length, width and height of the housing.
Shroud	160 mm long	35 mm outside diameter and 31 mm inside diameter.
Arm section	50 mm deep	3 mm walls and 6 mm ribs. Nominal side clearance for the tilt servo is 0.2 mm.
Head fork	48 mm opening	The shroud axis lies 10 mm above the head-tilt axis.
Sensor pod	58 × 30 × 27 mm	Nominal envelope below the head. Tilt pivot pin is Ø8 mm with a 608 bearing.

Modeled component register

Assembly order in the Fusion component register. Each hardware group can contain several fasteners.

PART NUMBER	MODELED COMPONENT	TYPE
DUME-H-001	Base Plate	Purchased
DUME-P-001	Base Cover	Printed
DUME-P-002	Yaw Tower	Printed
DUME-H-002	Yaw Bearing Lower	Purchased
DUME-H-003	Yaw Bearing Upper	Purchased
DUME-P-003	Yaw Servo Cradle	Printed
DUME-P-004	Yaw Servo Strap	Printed
DUME-E-001	Yaw Servo	Envelope
DUME-P-005	Arduino Mount	Printed
DUME-E-002	Arduino UNO R4	Envelope
DUME-P-006	Hose Support Post	Printed
DUME-P-007	Hose Anchor	Printed
DUME-H-004	Hardware Base	Grouped hardware
DUME-P-008	Yaw Pinion	Printed
DUME-E-003	Yaw Servo Horn	Envelope
DUME-P-009	Yaw Hub	Printed
DUME-P-010	Yaw Race Spacer	Printed

PART NUMBER	MODELED COMPONENT	TYPE
DUME-P-011	Yaw Retainer	Printed
DUME-P-012	Yaw Ring Gear	Printed
DUME-P-013	Yaw Clamp Spacer	Printed
DUME-P-014	Turntable	Printed
DUME-P-015	Yoke Left	Printed
DUME-P-016	Yoke Right	Printed
DUME-H-005	Shoulder Bearing Left	Purchased
DUME-H-006	Shoulder Bearing Right	Purchased
DUME-P-017	Servo Cradle	Printed
DUME-P-018	Servo Strap	Printed
DUME-E-004	Shoulder Servo	Envelope
DUME-H-007	GT2 Belt	Purchased
DUME-P-019	Belt Guard	Printed
DUME-P-020	Shoulder Cap Right	Printed
DUME-P-021	Shoulder Cap Left	Printed
DUME-P-022	Electronics Bay	Printed
DUME-E-005	Raspberry Pi 5	Envelope

Modeled component register

Assembly order in the Fusion component register. Each hardware group can contain several fasteners.

PART NUMBER	MODELED COMPONENT	TYPE
DUME-P-023	Platform Hose Clip	Printed
DUME-H-008	Hardware Turntable	Grouped hardware
DUME-P-024	Drive Pulley	Printed
DUME-E-006	Shoulder Servo Horn	Envelope
DUME-H-009	Shoulder Shaft	Purchased
DUME-P-025	Shaft Spacer Left	Printed
DUME-P-026	Shaft Spacer Right	Printed
DUME-H-010	Shaft Shim Left	Purchased
DUME-P-027	Shaft Shim Right	Printed
DUME-H-011	Shaft Collar	Purchased
DUME-P-028	Driven Pulley	Printed
DUME-P-029	Arm Left	Printed
DUME-P-030	Arm Right	Printed
DUME-E-007	Tilt Servo	Envelope
DUME-H-012	Tilt Pivot Pin	Purchased
DUME-P-031	Arm Hose Clip	Printed
DUME-H-013	Hose Arm Run	Purchased

PART NUMBER	MODELED COMPONENT	TYPE
DUME-H-014	Hardware Arm	Grouped hardware
DUME-P-032	Head Left	Printed
DUME-P-033	Head Right	Printed
DUME-P-034	Head Top Plate	Printed
DUME-P-035	Sensor Bracket	Printed
DUME-H-015	Tilt Bearing	Purchased
DUME-E-008	Tilt Servo Horn	Envelope
DUME-P-036	Barrel Shroud	Printed
DUME-P-037	Head Hose Port	Printed
DUME-H-016	Hardware Head	Grouped hardware
DUME-P-038	Sensor Pod	Printed
DUME-E-009	RGB Camera	Envelope
DUME-E-010	Thermal Sensor	Envelope
DUME-H-017	Hardware Pod	Grouped hardware
DUME-H-018	Hose Service Loop	Purchased
DUME-H-019	Hose Shoulder Loop	Purchased
DUME-H-020	Hose Tilt Loop	Purchased

Fusion assembly drawings

Nine pairs of A3 sheets show the full robot and eight subassemblies. Each pair starts with a ballooned parts list and continues with orthographic dimensions.

ASSEMBLY	BALLOONED VIEW AND PARTS LIST	DIMENSIONED VIEWS
Full robot	Sheet 01	Sheet 02
Base	Sheet 03	Sheet 04
Yaw pinion	Sheet 05	Sheet 06
Turntable and shoulder	Sheet 07	Sheet 08
Shoulder drive	Sheet 09	Sheet 10
Arm	Sheet 11	Sheet 12
Head	Sheet 13	Sheet 14
Sensor pod	Sheet 15	Sheet 16
Flexible hose	Sheet 17	Sheet 18

Parts List			
Item	Qty	Assembly ID	Material
1	1	A1	----
2	1	A2	----
3	1	A3	----
4	1	A4	----
5	1	A5	----
6	1	A6	----
7	1	A7	----
8	1	A8	Steel

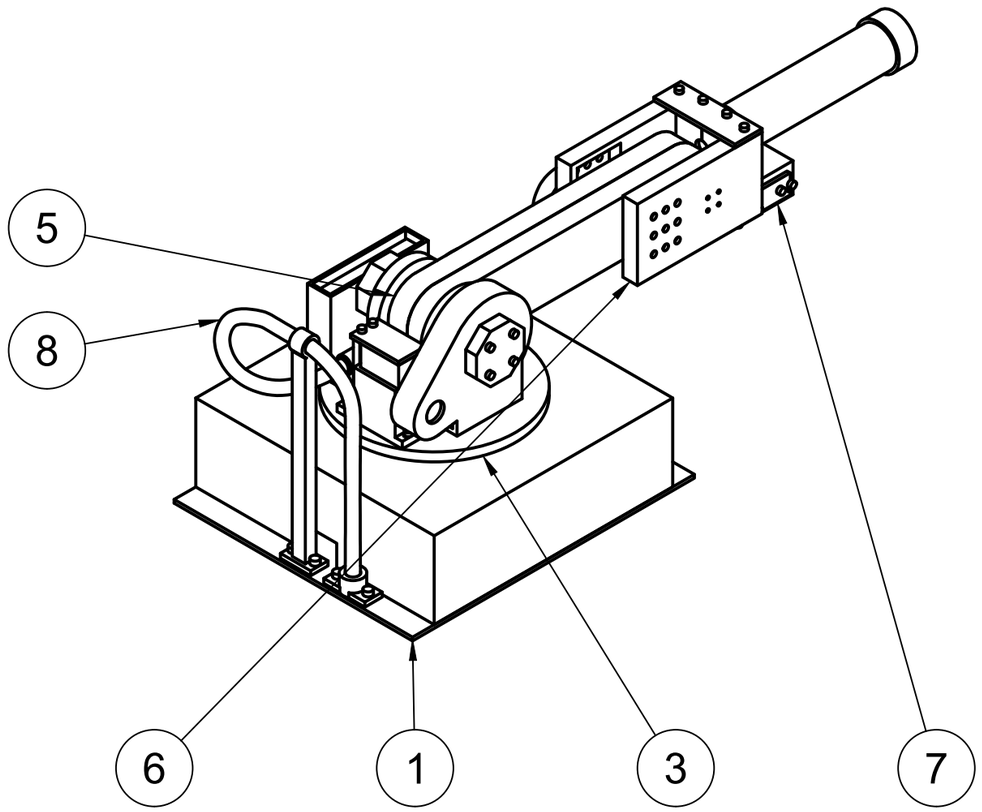

Dept.	Technical reference	Created by zakary miles	Approved by
		Document type	Document status
		Title DUM-E_bot	DWG No.
			Rev. / Sheet 1/18

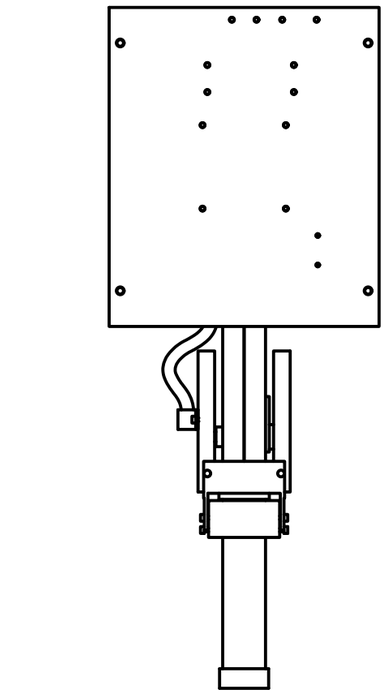

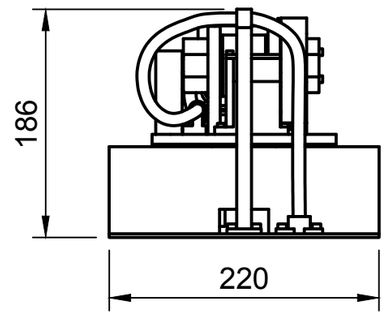

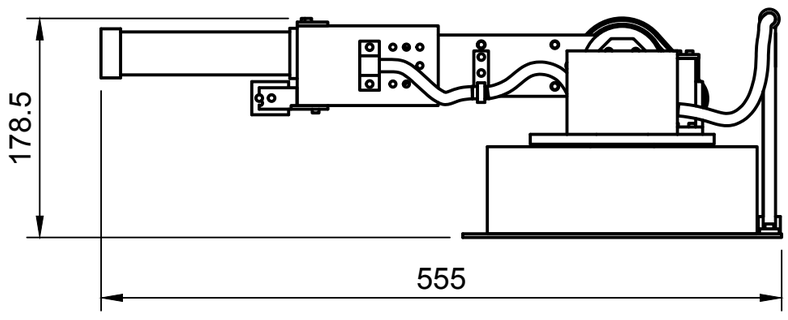

Dept.	Technical reference	Created by	Approved by
		zakary miles	
		Document type	Document status
		Title	DWG No.
		DUM-E_bot	
		Rev.	Sheet 2/18

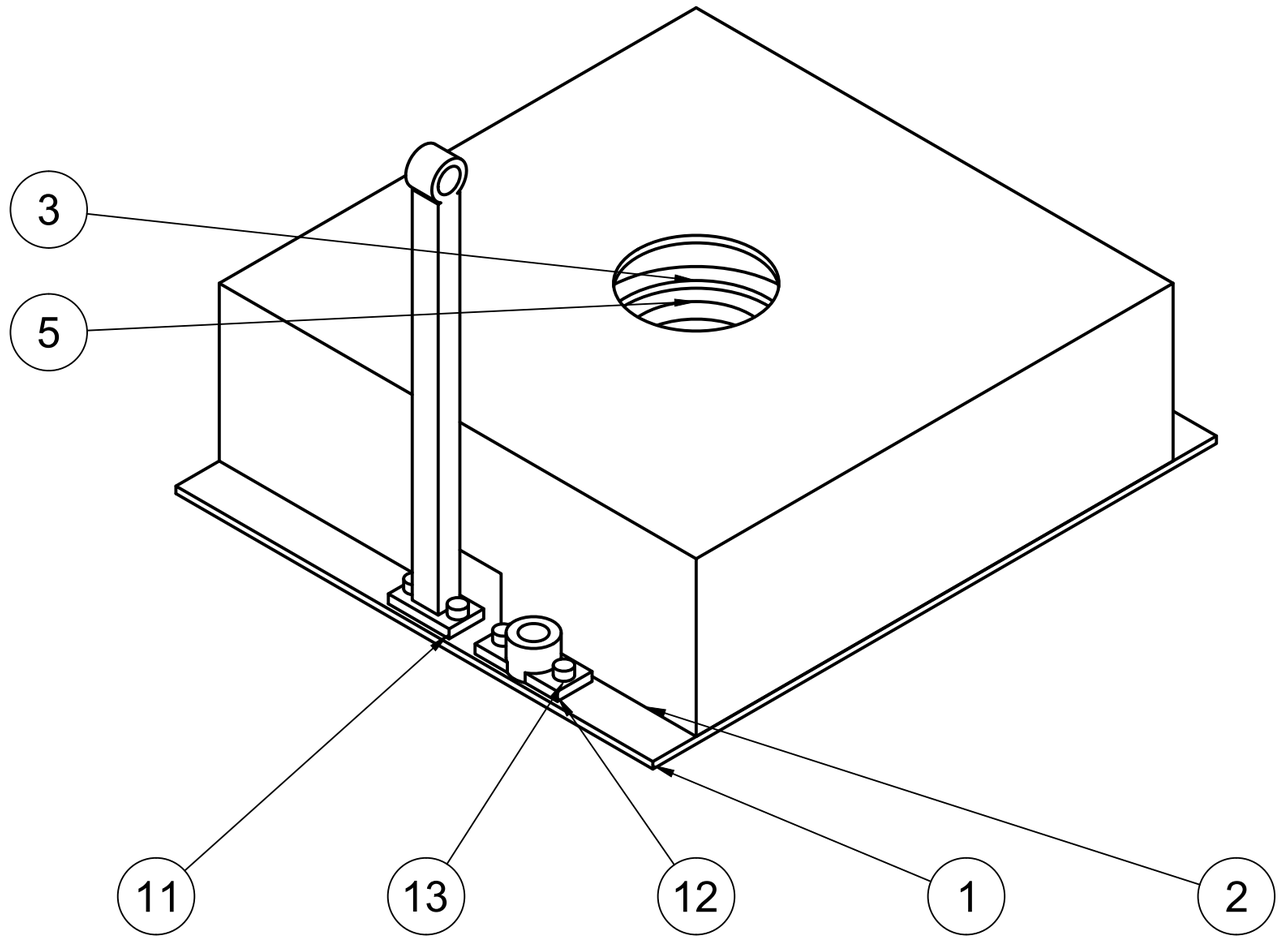

Parts List			
Item	Qty	Part Number	Material
1	1	DUME-H-001	Steel
2	1	DUME-P-001	PETG - assumed density
3	1	DUME-P-002	PETG - assumed density
4	1	DUME-H-002	Steel
5	1	DUME-H-003	Steel
6	1	DUME-P-003	PETG - assumed density
7	1	DUME-P-004	PETG - assumed density
8	1	DUME-E-001	Steel
9	1	DUME-P-005	PETG - assumed density
10	1	DUME-E-002	Steel
11	1	DUME-P-006	PETG - assumed density
12	1	DUME-P-007	PETG - assumed density
13	1	DUME-H-004	Steel

Dept.	Technical reference	Created by: zakary miles	Approved by
		Document type	Document status
		Title: DUM-E_bot	DWG No.
			Rev. / Sheet: 3/18

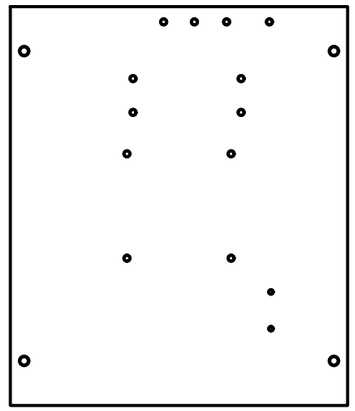

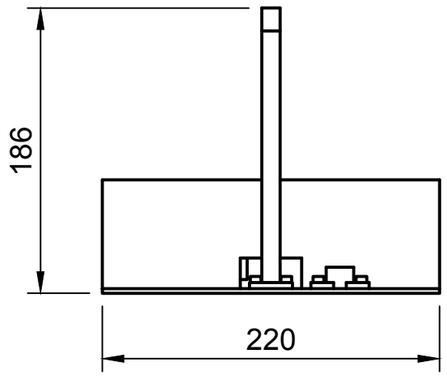

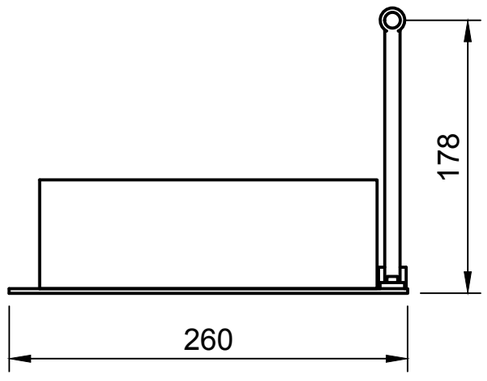

Dept.	Technical reference	Created by	Approved by
		zakary miles	
		Document type	Document status
		Title	DWG No.
		DUM-E_bot	
		Rev.	Sheet 4/18

Parts List			
Item	Qty	Part Number	Material
1	1	DUME-P-008	PETG - assumed density
2	1	DUME-E-003	Steel

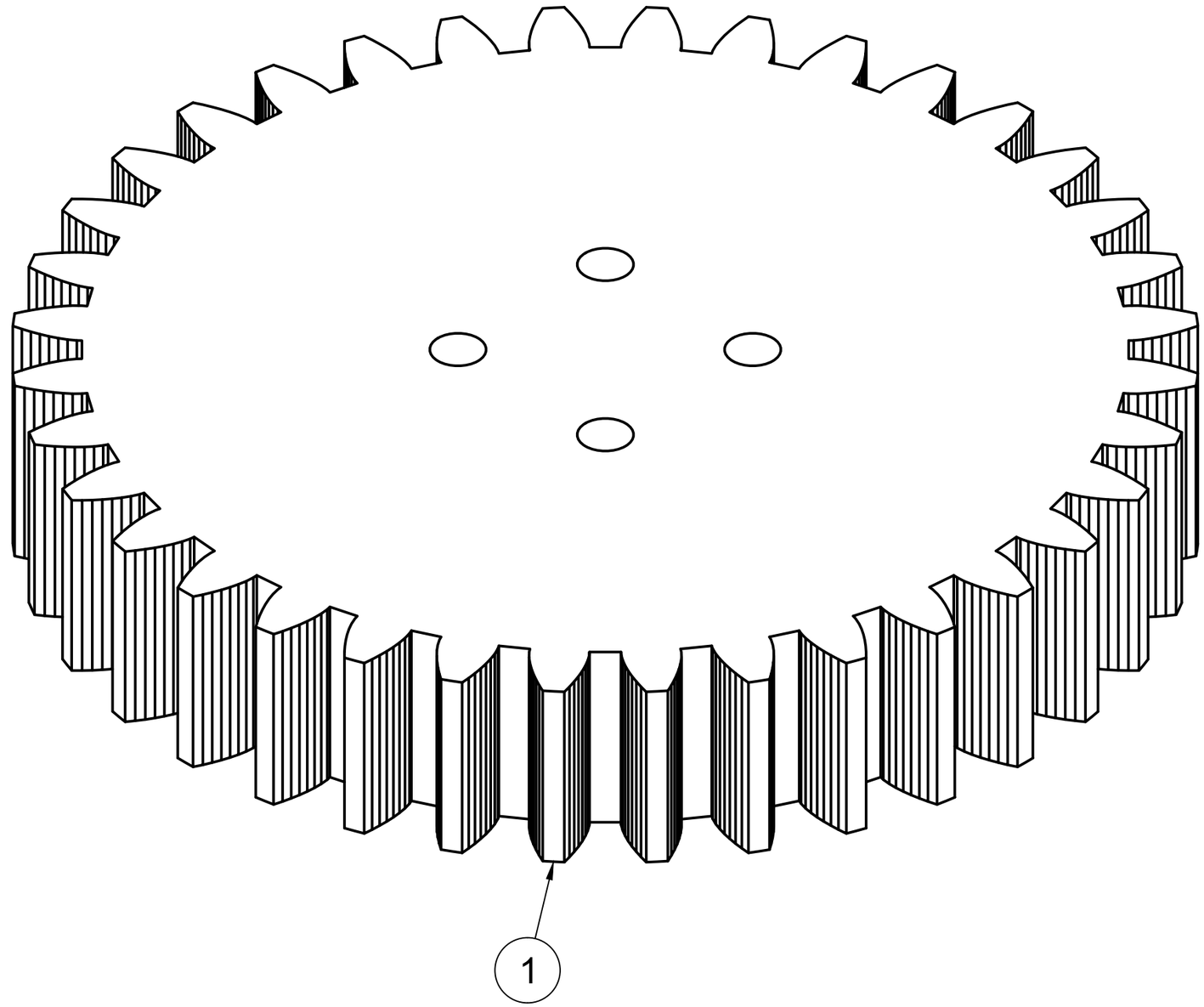

Dept.	Technical reference	Created by: zakary miles	Approved by
		Document type	Document status
		Title: DUM-E_bot	DWG No.
			Rev. / Sheet: 5/18

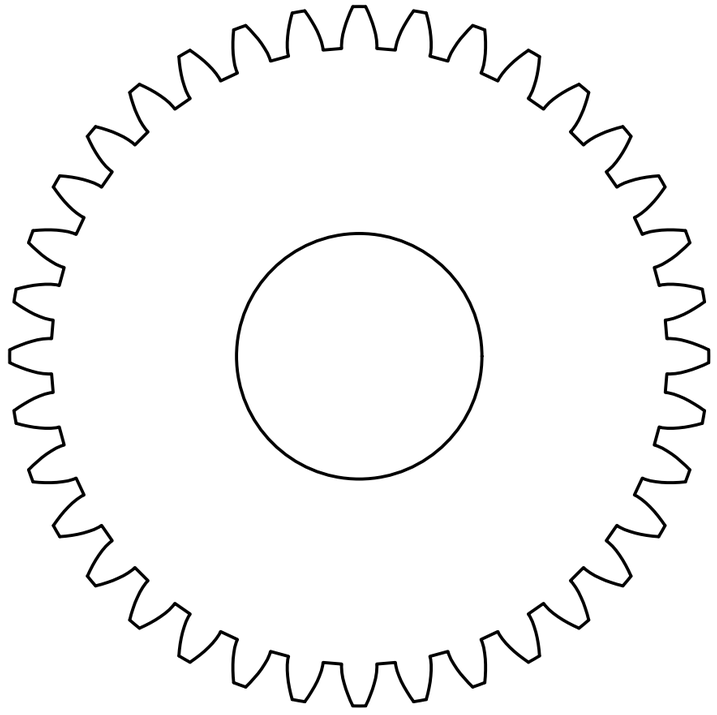

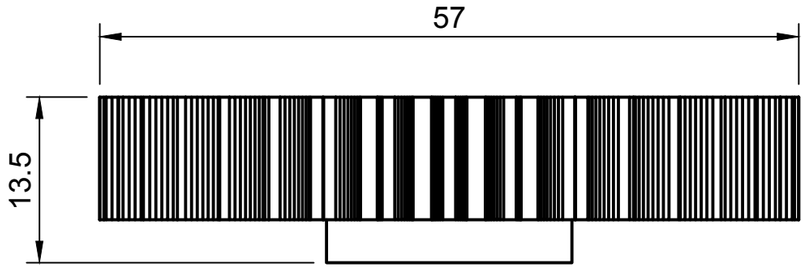

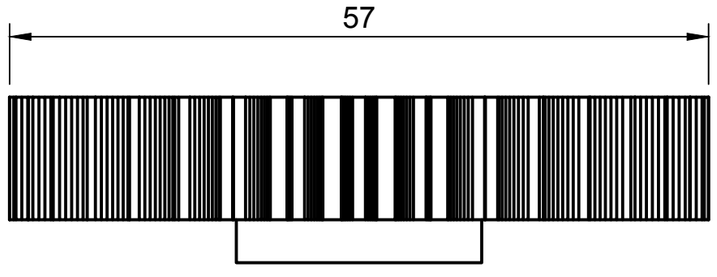

Dept.	Technical reference	Created by zakary miles	Approved by
		Document type	Document status
		Title DUM-E_bot	DWG No.
			Rev. / Sheet 6/18

Parts List			
Item	Qty	Part Number	Material
1	1	DUME-P-009	PETG - assumed density
2	1	DUME-P-010	PETG - assumed density
3	1	DUME-P-011	PETG - assumed density
4	1	DUME-P-012	PETG - assumed density
5	1	DUME-P-013	PETG - assumed density
6	1	DUME-P-014	PETG - assumed density
7	1	DUME-P-015	PETG - assumed density
8	1	DUME-P-016	PETG - assumed density
9	1	DUME-H-005	Steel
10	1	DUME-H-006	Steel
11	1	DUME-P-017	PETG - assumed density
12	1	DUME-P-018	PETG - assumed density
13	1	DUME-E-004	Steel
14	1	DUME-H-007	Steel
15	1	DUME-P-019	PETG - assumed density
16	1	DUME-P-020	PETG - assumed density
17	1	DUME-P-021	PETG - assumed density
18	1	DUME-P-022	PETG - assumed density
19	1	DUME-E-005	Steel
20	1	DUME-P-023	PETG - assumed density
21	1	DUME-H-008	Steel

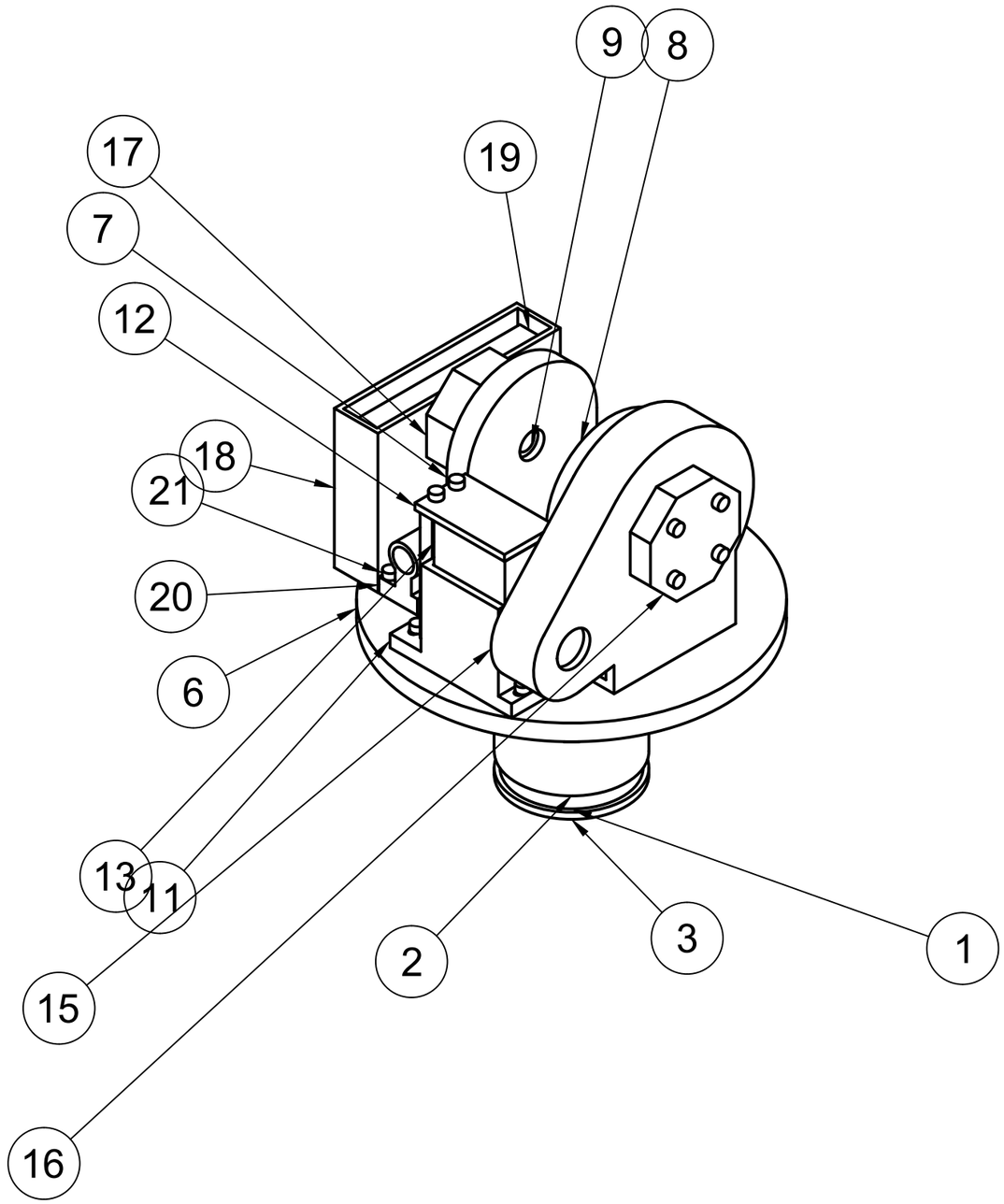

Dept.	Technical reference	Created by zakary miles	Approved by
		Document type	Document status
		Title DUM-E_bot	DWG No.
			Rev. / Sheet 7/18

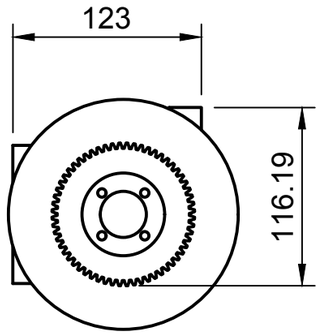

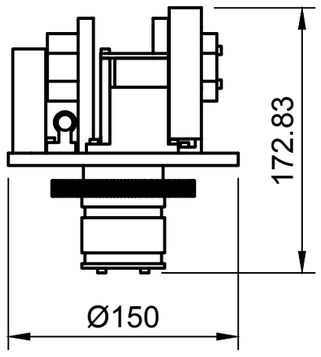

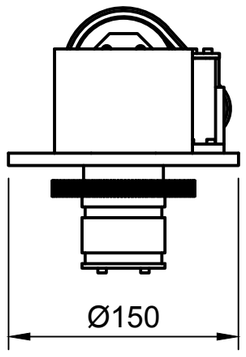

Dept.	Technical reference	Created by	Approved by
		zakary miles	
		Document type	Document status
		Title	DWG No.
		DUM-E_bot	
			Rev. / Sheet 8/18

Parts List			
Item	Qty	Part Number	Material
1	1	DUME-P-024	PETG - assumed density
2	1	DUME-E-006	Steel

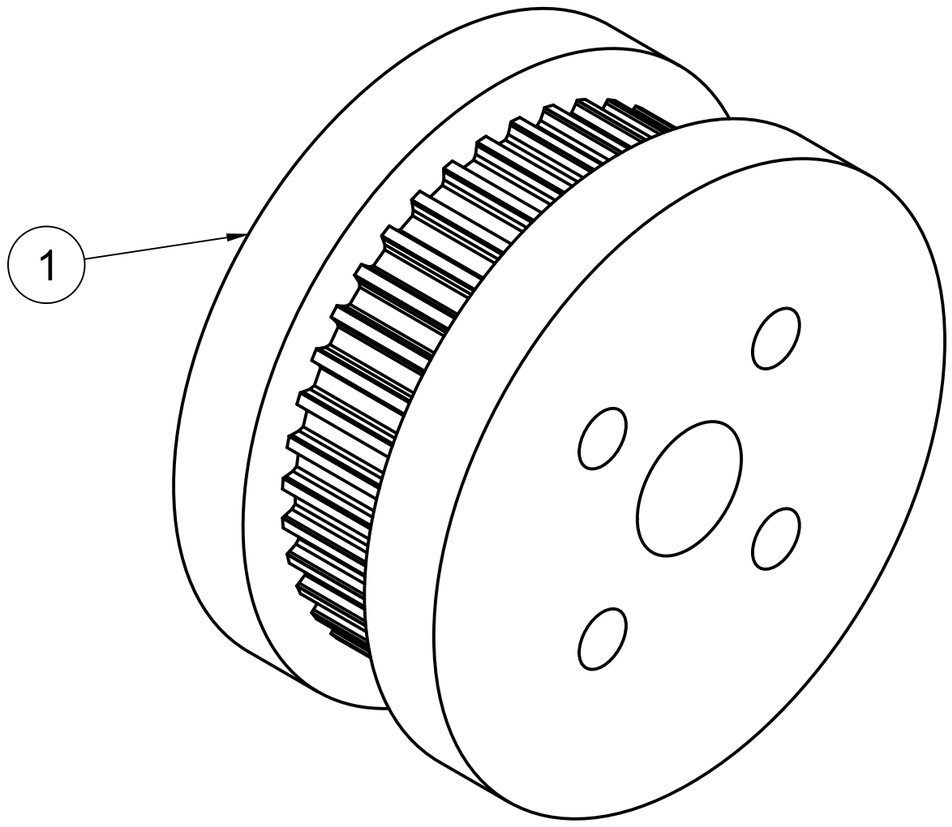

Dept.	Technical reference	Created by: zakary miles	Approved by
		Document type	Document status
		Title: DUM-E_bot	DWG No.
			Rev. / Sheet: 9/18

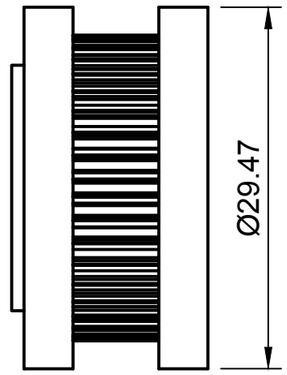

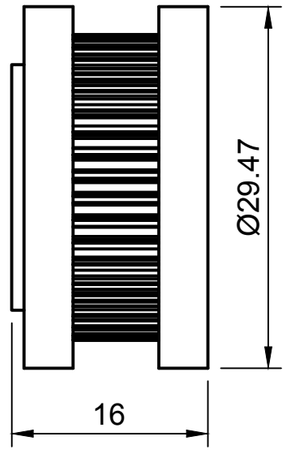

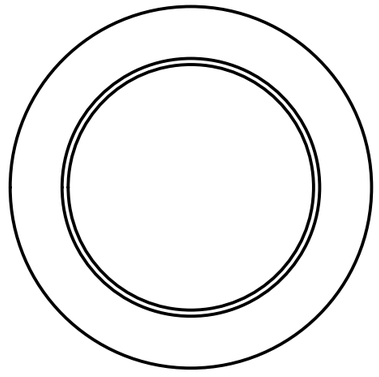

Dept.	Technical reference	Created by: zakary miles	Approved by
		Document type	Document status
		Title: DUM-E_bot	DWG No.
			Rev. / Sheet: 10/18

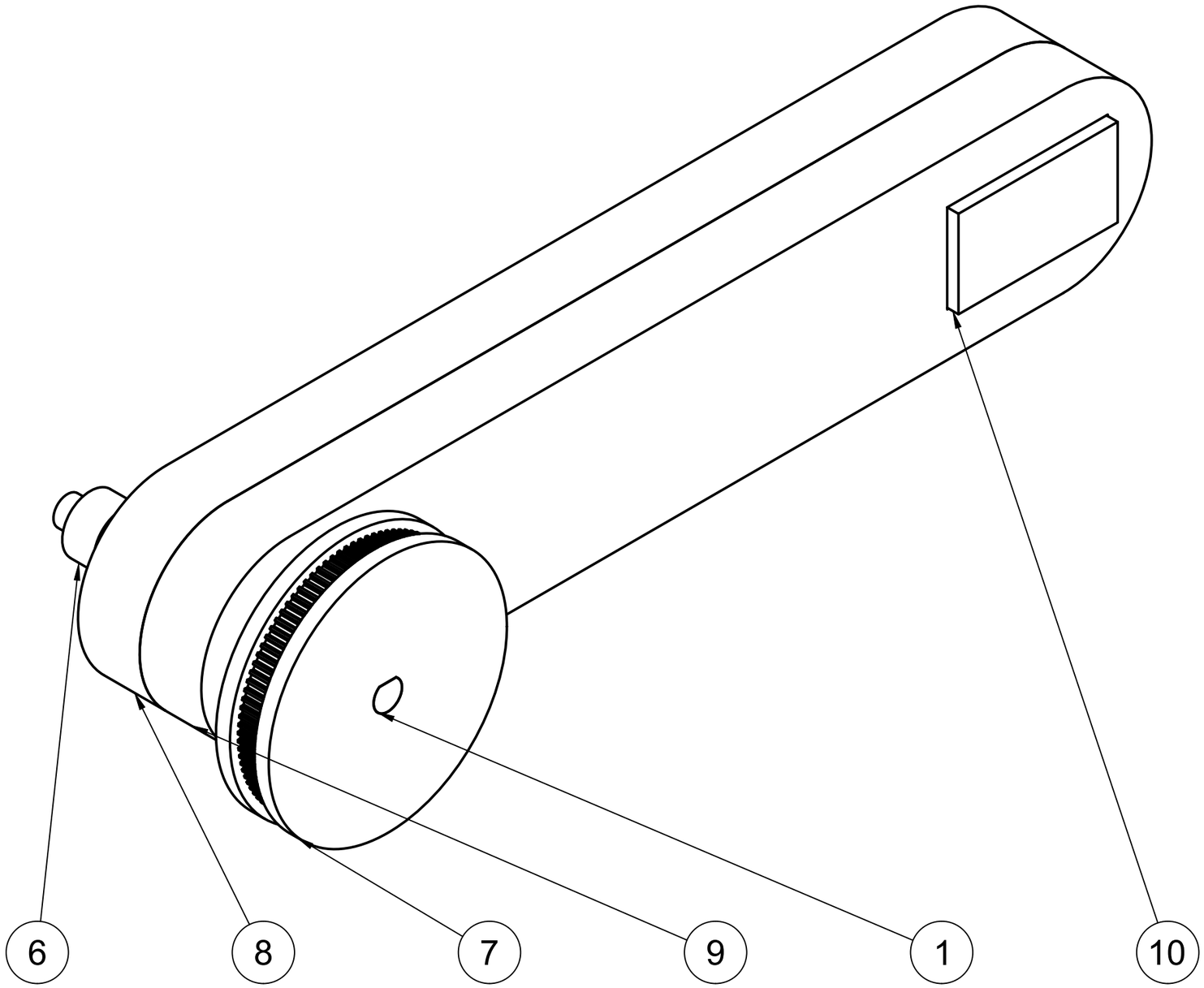

Parts List			
Item	Qty	Part Number	Material
1	1	DUME-H-009	Steel
2	1	DUME-P-025	PETG - assumed density
3	1	DUME-P-026	PETG - assumed density
4	1	DUME-H-010	Steel
5	1	DUME-P-027	PETG - assumed density
6	1	DUME-H-011	Steel
7	1	DUME-P-028	PETG - assumed density
8	1	DUME-P-029	PETG - assumed density
9	1	DUME-P-030	PETG - assumed density
10	1	DUME-E-007	Steel
11	1	DUME-H-012	Steel
12	1	DUME-P-031	PETG - assumed density
13	1	DUME-H-013	Steel
14	1	DUME-H-014	Steel

Dept.	Technical reference	Created by: zakary miles	Approved by
		Document type	Document status
		Title: DUM-E_bot	DWG No.
			Rev. / Sheet: 11/18

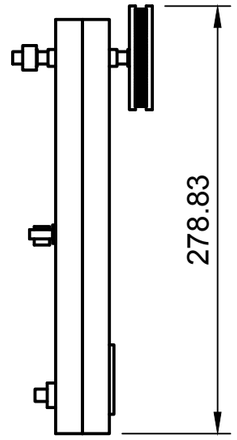

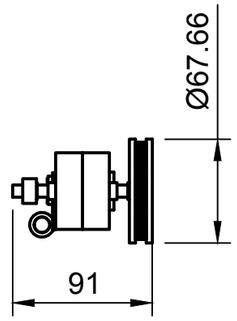

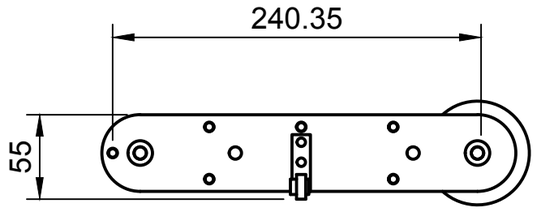

Dept.	Technical reference	Created by	Approved by
		zakary miles	
		Document type	Document status
		Title	DWG No.
		DUM-E_bot	
		Rev.	Sheet 12/18

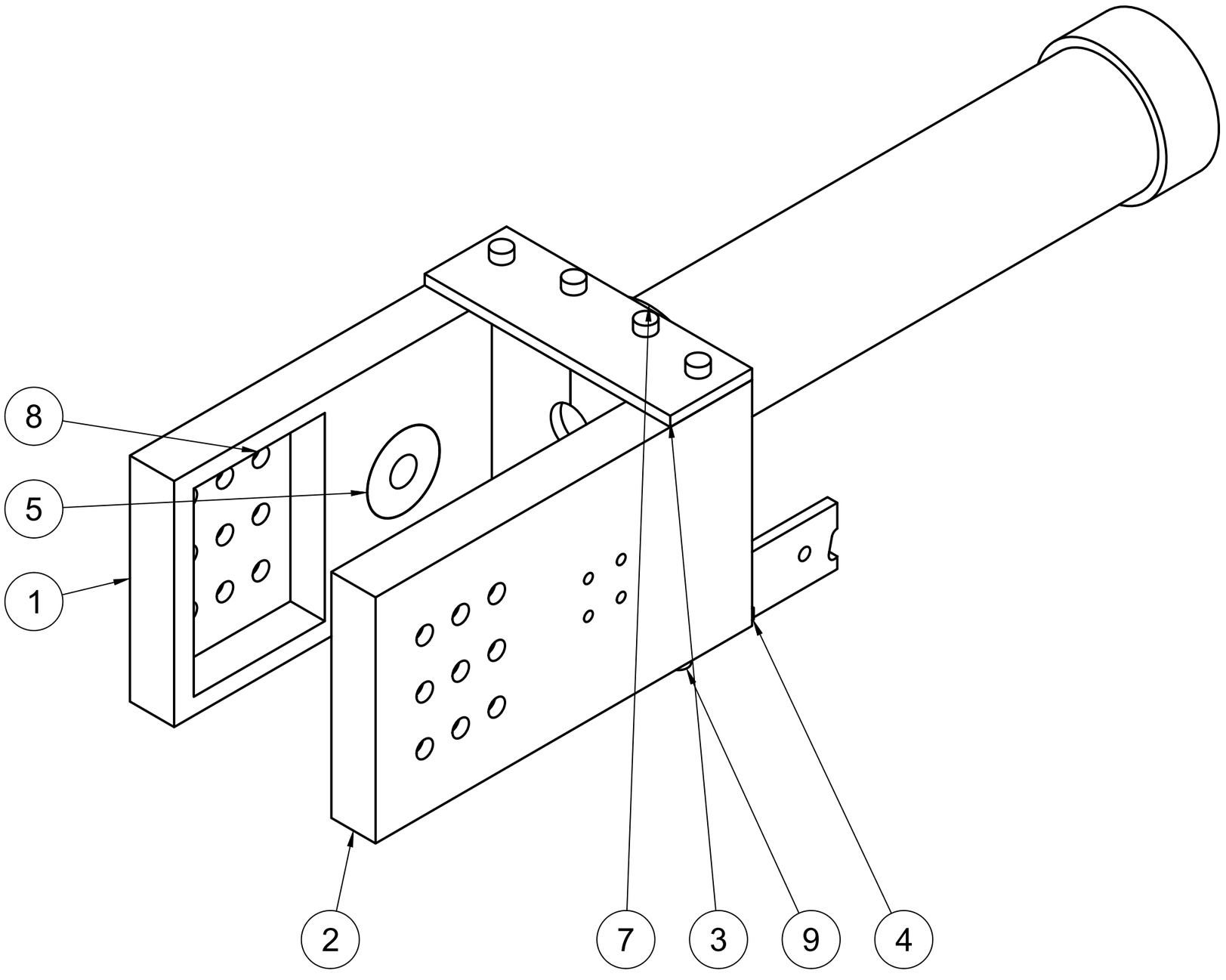

Parts List			
Item	Qty	Part Number	Material
1	1	DUME-P-032	PETG - assumed density
2	1	DUME-P-033	PETG - assumed density
3	1	DUME-P-034	PETG - assumed density
4	1	DUME-P-035	PETG - assumed density
5	1	DUME-H-015	Steel
6	1	DUME-E-008	Steel
7	1	DUME-P-036	PETG - assumed density
8	1	DUME-P-037	PETG - assumed density
9	1	DUME-H-016	Steel

Dept.	Technical reference	Created by: zakary miles	Approved by
		Document type	Document status
		Title: DUM-E_bot	DWG No.
			Rev. / Sheet: 13/18

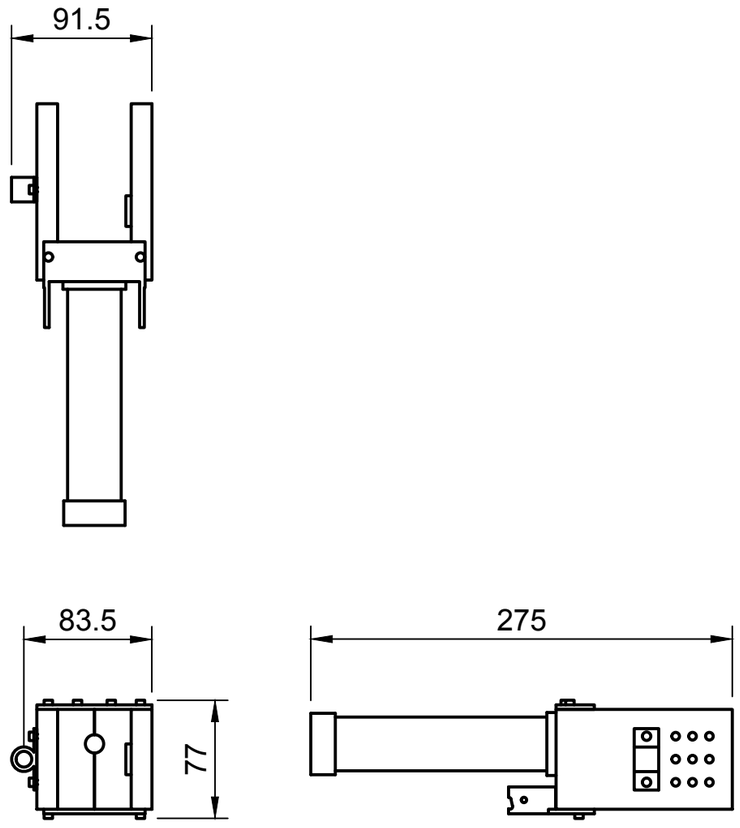

Dept.	Technical reference	Created by	Approved by
		zakary miles	
		Document type	Document status
		Title	DWG No.
		DUM-E_bot	
		Rev.	Sheet 14/18

Parts List			
Item	Qty	Part Number	Material
1	1	DUME-P-038	PETG - assumed density
2	1	DUME-E-009	Steel
3	1	DUME-E-010	Steel
4	1	DUME-H-017	Steel

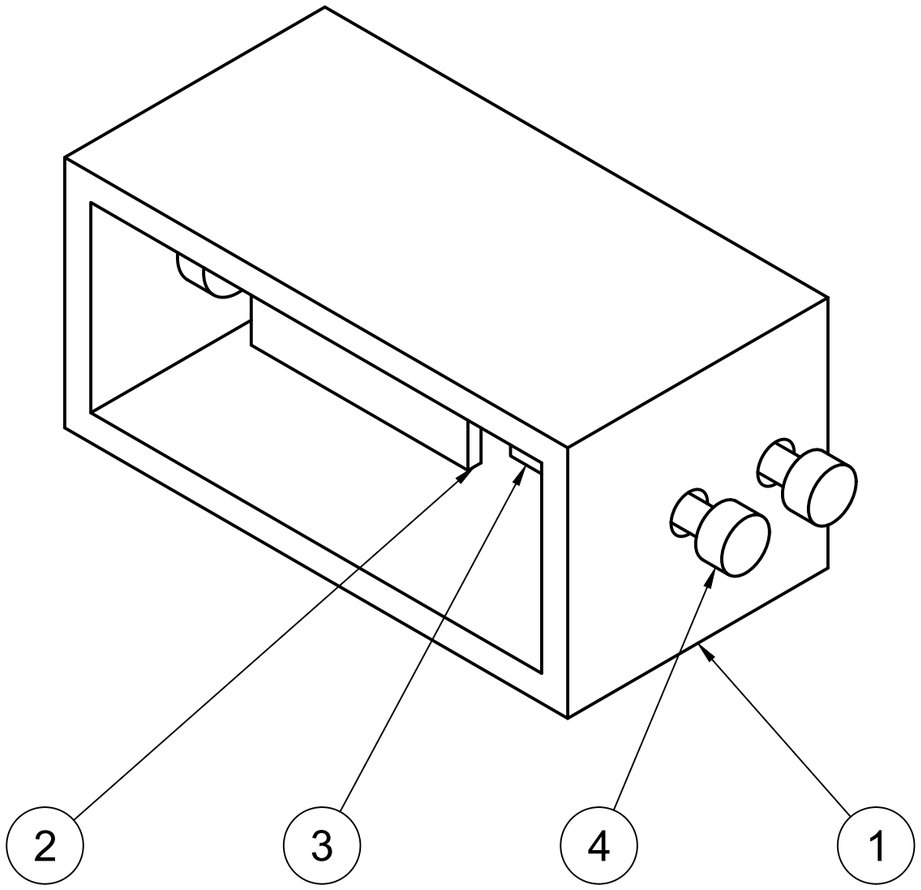

Dept.	Technical reference	Created by zakary miles	Approved by
		Document type	Document status
		Title DUM-E_bot	DWG No.
			Rev. / Sheet 15/18

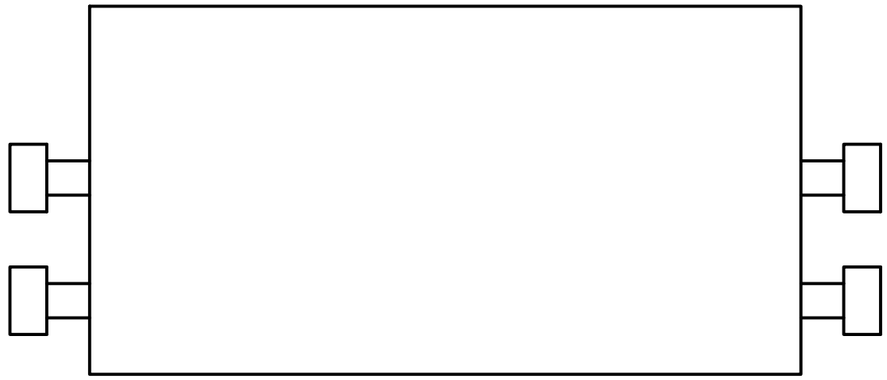

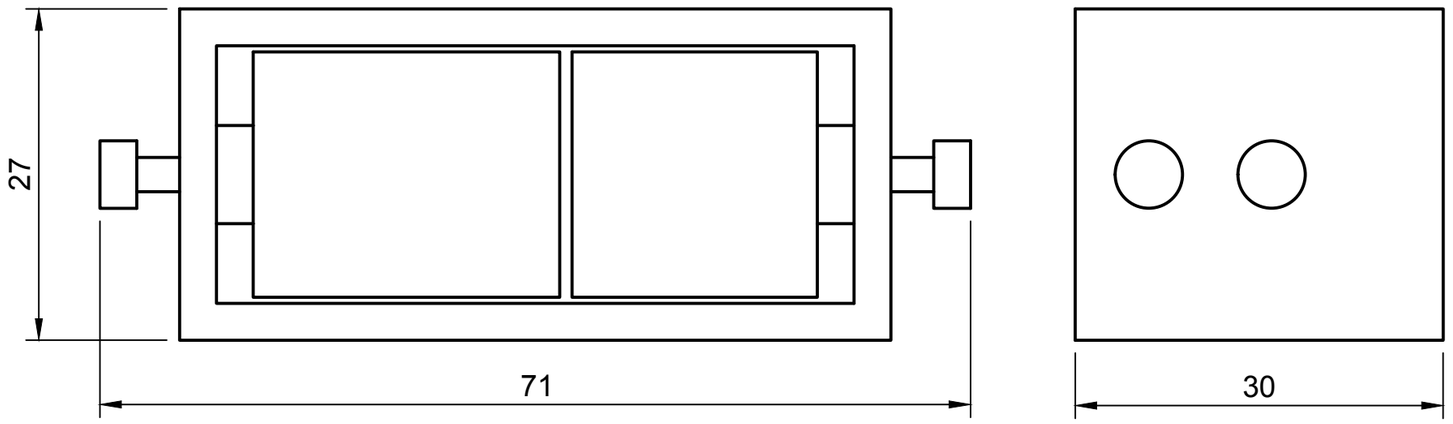

Dept.	Technical reference	Created by	Approved by
		zakary miles	
		Document type	Document status
		Title	DWG No.
		DUM-E_bot	
		Rev.	Sheet
			16/18

Parts List			
Item	Qty	Part Number	Material
1	1	DUME-H-018	Steel
2	1	DUME-H-019	Steel
3	1	DUME-H-020	Steel

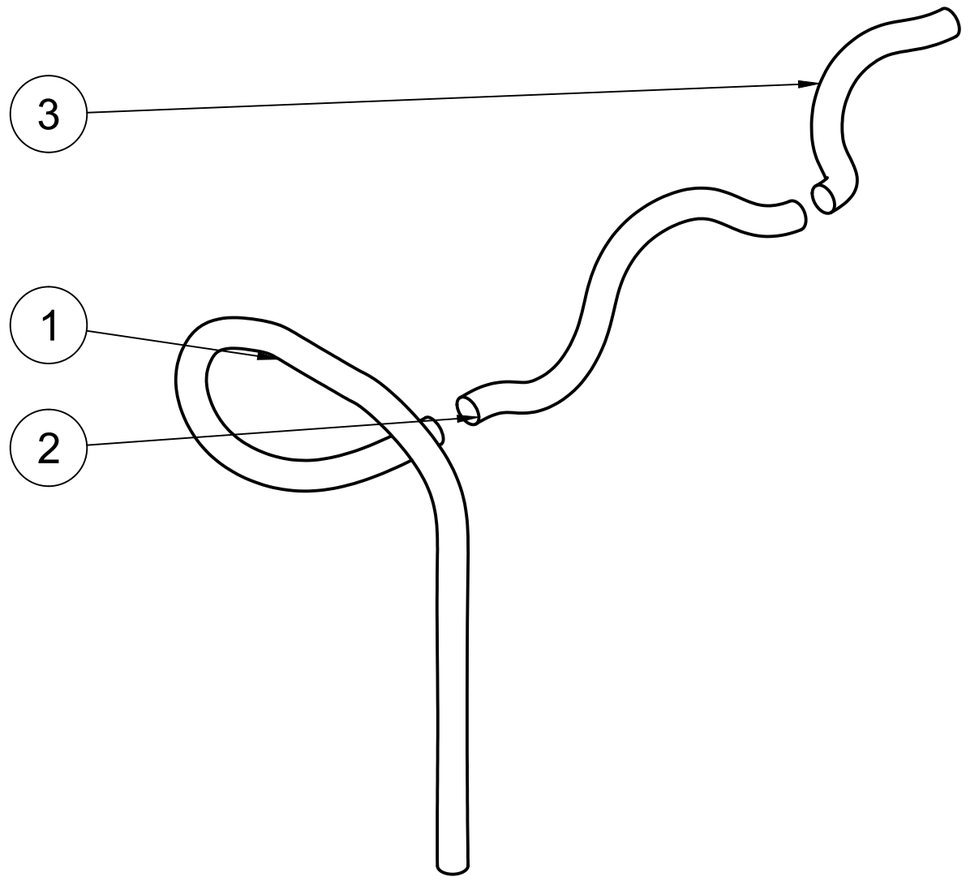

Dept.	Technical reference	Created by: zakary miles	Approved by
		Document type	Document status
		Title: DUM-E_bot	DWG No.
			Rev. / Sheet: 17/18

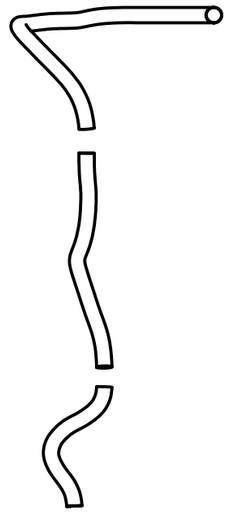

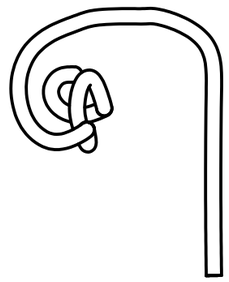

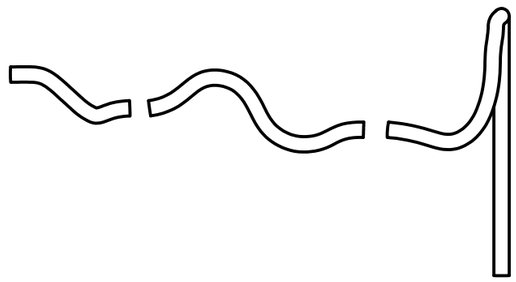

Dept.	Technical reference	Created by	Approved by
		zakary miles	
		Document type	Document status
		Title	DWG No.
		DUM-E_bot	
		Rev.	Sheet
			18/18